HARFORD COUNTY MARYLAND
DEPARTMENT OF PARKS AND RECREATION
CAPITOL PLANNING AND DEVELOPMENT

INDEX OF DRAWINGS

DWG NO:	TITLE:	SHEET NO:
C–01	COVER SHEET AND VICINITY MAP	1
S–1	STRUCTURAL GENERAL NOTES AND SITE PLAN	2
S–2	PIER REPAIR LOCATIONS AND CALL–OUTS	3
S–3	PIER REPAIR DETAILS	4
M–00	MECHANICAL NOTES, LEGEND AND ABBREVIATIONS	5
M–01	FISHING PIER STATION FRONT AND SIDE ELEVATIONS	6
M–02	FISHING STATION PARTIAL PIPING PLAN AND DETAILS	7
M–03	FISHING STATION ENCLOSURE DETAILS	8
E–01	ELECTRICAL DEMOLITION	9
E–02	ELECTRICAL NEW WORK	10

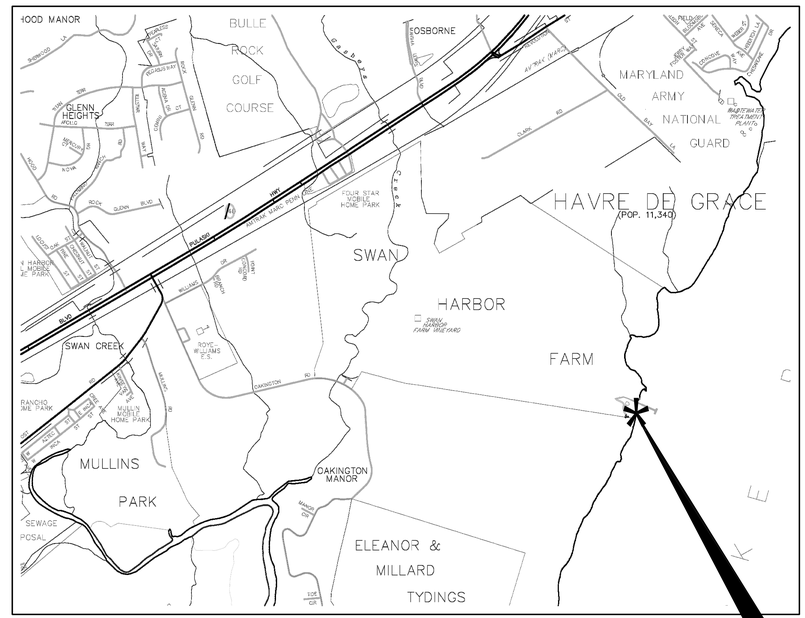

HARFORD COUNTY ADC MAP
SCALE: N.T.S.

PROJECT LOCATION

VICINITY MAP
SCALE: N.T.S.

OWNER'S / DEVELOPER'S CERTIFICATION

I/WE HEREBY CERTIFY THAT ALL CLEARING, GRADING, CONSTRUCTION AND/OR DEVELOPMENT WILL BE DONE PURSUANT TO THIS PLAN AND THAT ANY RESPONSIBLE PERSONNEL INVOLVED IN THE CONSTRUCTION PROJECT WILL HAVE A CERTIFICATION OF TRAINING AT A MARYLAND DEPARTMENT OF THE ENVIRONMENT APPROVED TRAINING PROGRAM FOR THE CONTROL OF SEDIMENT AND EROSION BEFORE BEGINNING THE PROJECT.

I HEREBY AUTHORIZE THE RIGHT OF ENTRY FOR PERIOD ON–SITE EVALUATION BY THE HARFORD SOIL, CONSERVATION DISTRICT OR THEIR REPRESENTATIVES AND THE STATE OF MARYLAND, DEPARTMENT OF THE ENVIRONMENT, COMPLIANCE INSPECTORS.

I HEREBY CERTIFY THAT THE DEVELOPMENT AND/OR CONSTRUCTION WILL BE DONE ACCORDING TO THIS PLAN OF DEVELOPMENT AND PLAN OF EROSION AND SEDIMENT CONTROL.

_____
OWNER/DEVLEOPER SIGNATURE DATE

_____
OWNER/DEVLEOPER SIGNATURE DATE

GENERAL NOTES:

1. ALL CONSTRUCTION SHALL BE IN ACCORDANCE WITH HARFORD COUNTY DEPARTMENT OF PUBLIC WORKS "STANDARD DETAILS AND SPECIFICATIONS" UNLESS OTHERWISE NOTED.
2. TOPOGRAPHY SURVEY PERFORMED PREVIOUSLY ON 11/23/04. HORIZONTAL CONTROL ESTABLISHED FROM CLOSED LOOP TRAVERSE. TRAVERSE POINTS ARE PK NAILS UNLESS OTHERWISE SPECIFIED.
3. VERTICAL CONTROL AT THE SITE IS BASED UPON BENCH MARK SET BY DNR ON THE EXISTING BULKHEAD AT HAVRE DE GRACE CITY YACHT BASIN. BENCH MARK IS 4 P.K. NAILS SET IN PILING AT ELEVATION OF +4.0' MLW AND A TIDE BOARD.
4. THE EXISTING UTILITIES AND OBSTRUCTIONS SHOWN ARE FROM THE BEST AVAILABLE RECORDS AND SHALL BE VERIFIED BY THE CONTRACTOR TO HIS SATISFACTION PRIOR TO CONSTRUCTION. NECESSARY PRECAUTIONS SHALL BE TAKEN BY THE CONTRACTOR TO PROTECT EXISTING SERVICES AND MAINS AND ANY DAMAGE TO THEM SHALL BE REPAIRED IMMEDIATELY AT HIS OWN EXPENSE.
5. IT SHALL BE DISTINCTLY UNDERSTOOD THAT FAILURE TO MENTION SPECIFICALLY ANY WORK WHICH WOULD NATURALLY BE REQUIRED TO COMPLETE THE PROJECT SHALL NOT RELIEVE THE CONTRACTOR OF HIS RESPONSIBILITY TO COMPLETE SUCH WORK.
6. THE CONTRACTOR SHALL CALL "MISS UTILITY" (1–800–257–7777) A MINIMUM OF 48 HOURS IN ADVANCE OF ANY EXCAVATION, BORING, PILE DRIVING AND/OR DIGGING FOR THE LOCATION OF UNDERGROUND UTILITY LINES.
7. THE MEAN TIDAL RANGE FOR THIS PROJECT IS 1.8'.

SEQUENCE OF CONSTRUCTION:

1. IT IS THE CONTRACTOR'S RESPONSIBILITY TO DETERMINE SEQUENCE, AND TO ENSURE THE STABILITY OF THE CONSTRUCTION AND ITS COMPONENT PARTS DURING REPAIR. THE ENGINEER OF RECORD TAKES NO RESPONSIBILITY FOR CONSTRUCTION MEANS AND METHODS OR JOBSITE SAFETY DURING CONSTRUCTION REPAIR. IT IS THE RESPONSIBILITY OF THE CONTRACTOR TO FOLLOW ALL APPLICABLE SAFETY CODES AND REGULATIONS DURING ALL PHASES OF CONSTRUCTION REPAIR. THE ENGINEER OF RECORD IS NOT ENGAGED IN, AND DOES NOT SUPERVISE CONSTRUCTION REPAIR.
2. PROVIDE TURBIDITY CURTAIN AROUND ANY WORK TO BE DONE FORM THE WATER DURING TIME OF WORK.

BID # - 16-245

SWAN HARBOR FARM PARK

401 OAKINGTON ROAD
HAVRE DE GRACE MARYLAND 21078

JOHNSON, MIRMIRAN & THOMPSON
72 Loveton Circle
Sparks, Maryland
21152
phone / 410.329.3100
fax / 410.472.2200
www.jmt.com
ENGINEERING . PLANNING . ENVIRONMENTAL
CONSTRUCTION MANAGEMENT . WATER/WASTEWATER
SURVEYING . LANDSCAPE ARCHITECTURE
ARCHITECTURE . GEOTECHNICAL
FACILITIES ENGINEERING . INFORMATION TECHNOLOGY

©2010 ALL RIGHTS RESERVED

SWAN HARBOR FARM PARK
PIER IMPROVEMENTS
DEPARTMENT OF PARKS AND RECREATION
HARFORD COUNTY, MARYLAND

seal:

PROFESSIONAL CERTIFICATION. I HEREBY CERTIFY THAT THESE DOCUMENTS WERE PREPARED OR APPROVED BY ME, AND THAT I AM A DULY LICENSED PROFESSIONAL ENGINEER UNDER THE LAWS OF THE STATE OF MARYLAND.
LICENSE NO. 30892, EXPIRATION DATE: 11/29/16

job number	13–1335–002
scale	AS NOTED
drawn by	LW
designed by	DL
checked by	JC
no. date	07/07/2016
01	ISSUED FOR CONSTRUCTION

sheet title:
COVER SHEET AND VICINITY MAP

sheet number:
C-01

GENERAL NOTES:

1. PROVIDE ALL LABOR, MATERIALS, TOOLS, EQUIPMENT, COORDINATION, ADDITIONAL DESIGN AND ALL INCIDENTALS NECESSARY TO PROVIDE A COMPLETE AND OPERABLE SYSTEM AS DETAILED ON PLANS.
2. THE CONTRACTOR SHALL THOROUGHLY REVIEW THE DESIGN DOCUMENTS AND BRING TO THE ATTENTION OF THE ENGINEER ANY DISCREPANCIES.
3. PERFORM WORK AS REQUIRED BY APPLICABLE CODES, REGULATIONS, AND LAWS OF LOCAL, STATE, AND FEDERAL GOVERNMENTS AND OTHER AUTHORITIES WITH LAWFUL JURISDICTION. ALL WORK SHALL BE IN ACCORDANCE WITH THE LATEST EDITIONS OF THE NATIONAL ELECTRIC CODE (NEC) AND NATIONAL FIRE PROTECTION ASSOCIATION CODE (NFPA) AS APPROVED BY HARFORD COUNTY.
4. MATERIAL AND EQUIPMENT SHALL BE UL, NEMA, ANSI, IEEE, ADA & CBM APPROVED FOR INTENDED SERVICE AS APPLICABLE. MATERIAL AND INSTALLATION SHALL MEET REQUIREMENTS OF STATE AND COUNTY ELECTRICAL CODE.
5. GIVE NOTICES, FILE PLANS, OBTAIN PERMITS AND LICENSES, PAY FEES AND BACK CHARGES, AND OBTAIN NECESSARY APPROVALS FROM AUTHORITIES THAT HAVE JURISDICTION. IT IS THE CONTRACTOR'S RESPONSIBILITY TO DETERMINE THE NOTICES, PERMITS, LICENSES, FEES, BACK CHARGES, AND APPROVALS REQUIRED FOR THIS PROJECT. ALL WORK SHALL COMPLY WITH THE REQUIREMENTS OF THE HARFORD COUNTY DEPARTMENT OF INSPECTIONS, LICENSES & PERMITS (DILP).
6. MAINTAIN RECORD DRAWINGS ON SITE. RECORD SET MUST BE COMPLETE AND CURRENT AND AVAILABLE FOR INSPECTION WHEN REQUESTED.
7. COORDINATE ALL ELECTRICAL ITEMS WITH EXISTING FIELD CONDITIONS. LOCATIONS SHOWN ARE APPROXIMATE AND MAY REQUIRE MINOR ADJUSTMENT IN THE FIELD TO SATISFY THE DESIGN INTENT. ROUTING OF CONDUIT IS DIAGRAMMATIC IN NATURE AND NOT INTENDED TO SHOW ALL REQUIRED OFFSETS AND DETAILS.
8. DAMAGE TO EXISTING FACILITIES AND EQUIPMENT SHALL BE REPAIRED OR REPLACED IMMEDIATELY BY THE CONTRACTOR AT NO ADDITIONAL EXPENSE TO THE OWNER.
9. CONTRACTOR SHALL SUBMIT FOR APPROVAL, SHOP DRAWINGS FOR ALL EQUIPMENT AND MATERIALS USED ON THE PROJECT.

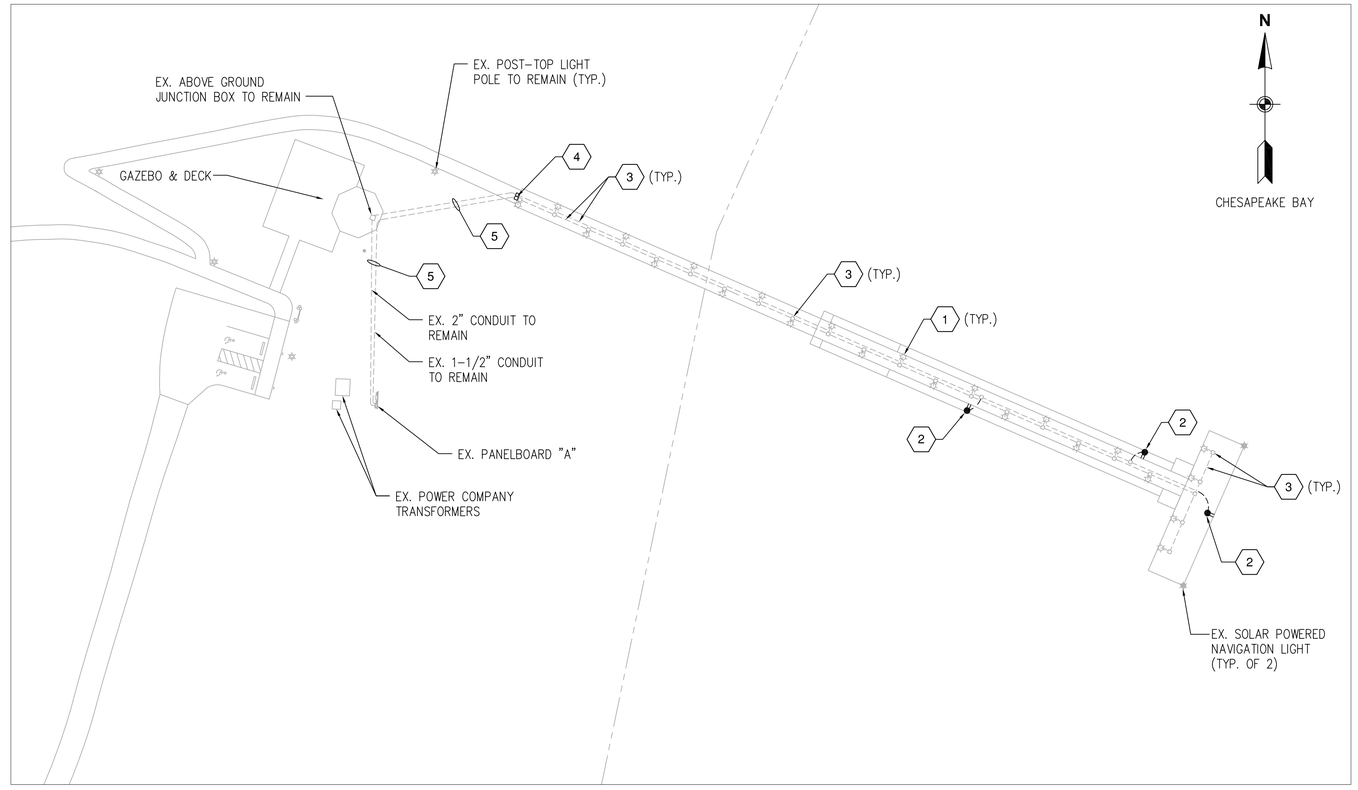

SITE PLAN
SCALE: 1"=30'-0"

LEGEND:

- EXISTING 50 WATT, METAL HALIDE STEPLIGHT TO REMAIN
- EXISTING POST-TOP LIGHT POLE TO REMAIN
- EXISTING SOLAR POWERED NAVIGATION LIGHT TO REMAIN
- EXISTING JUNCTION BOX TO REMAIN
- EXISTING JUNCTION BOX TO BE DEMOLISHED
- EXISTING MARINE SHORE POWER PEDESTAL

SITE PLAN KEY NOTES:

1. EXISTING 50W METAL HALIDE STEPLIGHTS TO REMAIN (TYPICAL OF 23 STEPLIGHTS ON PIER) DISCONNECT EXISTING WIRING AND CONDUIT AT BACK OF EACH FIXTURE. ABANDON ALL REMAINING EXISTING WIRING AND CONDUIT BELOW PIER IN PLACE.
2. REMOVE EXISTING MARINE SHORE POWER PEDESTAL. REMOVE JUST ENOUGH EXISTING WIRING AND CONDUIT TO CLEAR SPACE FOR REINSTALLATION OF NEW MARINE SHORE POWER PEDESTAL AT SAME LOCATION. ABANDON ALL REMAINING WIRING AND CONDUIT UNDER PIER.
3. ABANDON ALL EXISTING CONDUIT AND JUNCTION BOXES INSTALLED BENEATH PIER, BACK TO CONDUIT STUB-UPS UNDER BEGINNING OF PIER (SEE KEYNOTE #5).
4. EXISTING 2" AND 1-1/2" CONDUIT STUB-UPS FROM EXISTING PANELBOARD TO REMAIN UNDER PIER. REMOVE ANY EXISTING JUNCTION BOXES INSTALLED ON STUB-UPS ONLY. ENSURE THAT EXISTING STEP-LIGHTING WIRING THAT IS TO BE ABANDONED UNDER PIER IS CUT AND LEFT DE-ENERGIZED.
5. REMOVE ALL EXISTING MARINE SHORE POWER PEDESTAL WIRING AND EXISTING STEP-LIGHT WIRING FROM EXISTING UNDERGROUND CONDUITS, FROM THE STUB-UPS UNDER PIER BACK TO EXISTING PANELBOARD "A".

15' 0 15' 30'
SCALE: 1" = 30'-0"

JOHNSON, MIRMIRAN & THOMPSON
72 Loveton Circle
Sparks, Maryland
21152
phone / 410.329.3100
fax / 410.472.2200
www.jmt.com
ENGINEERING . PLANNING . ENVIRONMENTAL
CONSTRUCTION MANAGEMENT . WATER/WASTEWATER
SURVEYING . LANDSCAPE ARCHITECTURE
ARCHITECTURE . GEOTECHNICAL
FACILITIES ENGINEERING . INFORMATION TECHNOLOGY

©2010 ALL RIGHTS RESERVED

SWAN HARBOR FARM PARK
PIER IMPROVEMENTS
DEPARTMENT OF PARKS AND RECREATION
HARFORD COUNTY, MARYLAND

seal:

STATE OF MARYLAND
WILLIAM H. MIRMIRAN
No. 13253
REGISTERED PROFESSIONAL ENGINEER

7-12-2016

PROFESSIONAL CERTIFICATION. I HEREBY CERTIFY THAT THESE DOCUMENTS WERE PREPARED OR APPROVED BY ME, AND THAT I AM A DULY LICENSED PROFESSIONAL ENGINEER UNDER THE LAWS OF THE STATE OF MARYLAND.

LICENSE NO. 13253, EXPIRATION DATE: 12/17/16

job number	13-1335-002
scale	AS NOTED
drawn by	SML
designed by	SML
checked by	WHM
no. date	07/07/2016
01	ISSUED FOR CONSTRUCTION

sheet title:
ELECTRICAL DEMOLITION

sheet number:
E-01

Q:\SMD\00-StructuresFacilities\13-1335-002 Swan Harbor\CADD\Electrical\E-01 - Electrical Demolition.dwg

ELECTRICAL NEW WORK NOTES:

1. ALL NEW WIRING SHALL BE TYPE XHHW INSULATION, SIZED AS SHOWN ON SITE PLAN.
2. ALL NEW CONDUIT SHALL BE GREY UV RESISTANT PVC SCHEDULE 80, SIZED AS SHOWN.
3. ALL NEW JUNCTION BOXES SHALL BE NEMA 4X PVC.
4. PROVIDE EXPANSION JOINTS FOR ALL STRAIGHT SECTIONS OF PVC RIGID NONMETALLIC CONDUIT 25' IN LENGTH OR GREATER OR ANY CONDUIT SECTION THAT IS EXPOSED TO DIRECT SUNLIGHT. EXPANSION JOINTS SHALL BE INSTALLED DIRECTLY ADJACENT TO JUNCTION BOXES. CONDUIT SUPPORTS SHALL BE "LOOSE" FITTING TO ALLOW THERMAL EXPANSION AND CONTRACTION OF CONDUIT THROUGHOUT THE SEASONS.
5. MOUNT ANY SECTIONS OF CONDUIT THAT MUST BE INSTALLED BENEATH THE SURFACE OF THE PIER AS HIGH AS POSSIBLE ABOVE WATER LEVEL TO PROTECT FROM DAMAGE.
6. ALL SPLICES AND TAPS SHALL BE WATERPROOF AND SUBMERSIBLE.

EXISTING PANEL

PANEL: A — **AMP: 200** — **VOLT: 120/240**

PHASE: 1 — **3 WIRE + GND**

MOUNTING: SURFACE — **MAIN: 200 MCB** — **AIC: 10K AMPS RMS SYM**

LIGHT TEXT - EXISTING TO REMAIN, BOLD TEXT - PROVIDE or NEW LOAD INDICATED

Branch Circuit Load Description	KVA Load A	KVA Load B	Trip Poles	Ckt. No.	Phase	Phase	Ckt. No.	Trip Poles	KVA Load A	KVA Load B	Branch Circuit Load Description
SPARE	0.00		20/1	1	A		2	15/1	0.00		PANEL GFCI RECEPT
WELL PUMP		0.00	15/2	3		B	4	20/1		0.00	DECK SWITCH & RECEPT
***	0.00		***	5	A		6	50/2	**6.00**		**PIER POWER PEDESTAL P1**
EXIST.		0.00	30/1	7		B	8	***		**6.00**	***
EXIST.	0.00		20/1	9	A		10	20/1	0.00		EXIST.
PIER POWER PEDESTAL P2		**6.00**	**50/2**	11		B	12	20/1		0.00	EXIST.
***	**6.00**		***	13	A		14	SPACE	0.00		
PIER POWER PEDESTAL P3		**6.00**	**50/2**	15		B	16	SPACE		0.00	
***	**6.00**		***	17	A		18	SPACE	0.00		
WALKWAY LIGHTS		0.00	25/2	19		B	20	SPACE		0.00	
***	0.00		***	21	A		22	SPACE	0.00		
		0.00	SPACE	23		B	24	SPACE		0.00	
	0.00		SPACE	25	A		26	SPACE	0.00		
		0.00	SPACE	27		B	28	SPACE		0.00	
	0.00		SPACE	29	A		30	SPACE	0.00		
	12.00	12.00	<< PHASE SUB-TOTALS >>						6.00	6.00	

PHASE A **18.00** kVA

PHASE B **18.00** kVA

36.00 kVA NEW TOTAL CONNECTED LOAD

23.00 kVA NEW TOTAL DEMAND LOAD

EXISTING PANEL INFO:
SQUARE D "QO" LOAD CENTER
TYPE 3R ENCLOSURE

PANEL SCHEDULE NOTES:

1. VERIFY EXISTING CIRCUIT BREAKER LOCATIONS FOR RIGHT AND LEFT PIER STEP-LIGHTING CIRCUITS PRIOR TO DISCONNECTING EXISTING WIRING AND CONNECTING NEW WIRING.
2. PROVIDE A NEW, UPDATED PANEL SCHEDULE SHOWING ALL KNOWN NEW AND EXISTING LOADS, SPARES AND SPACES ONCE CONSTRUCTION IS COMPLETE.

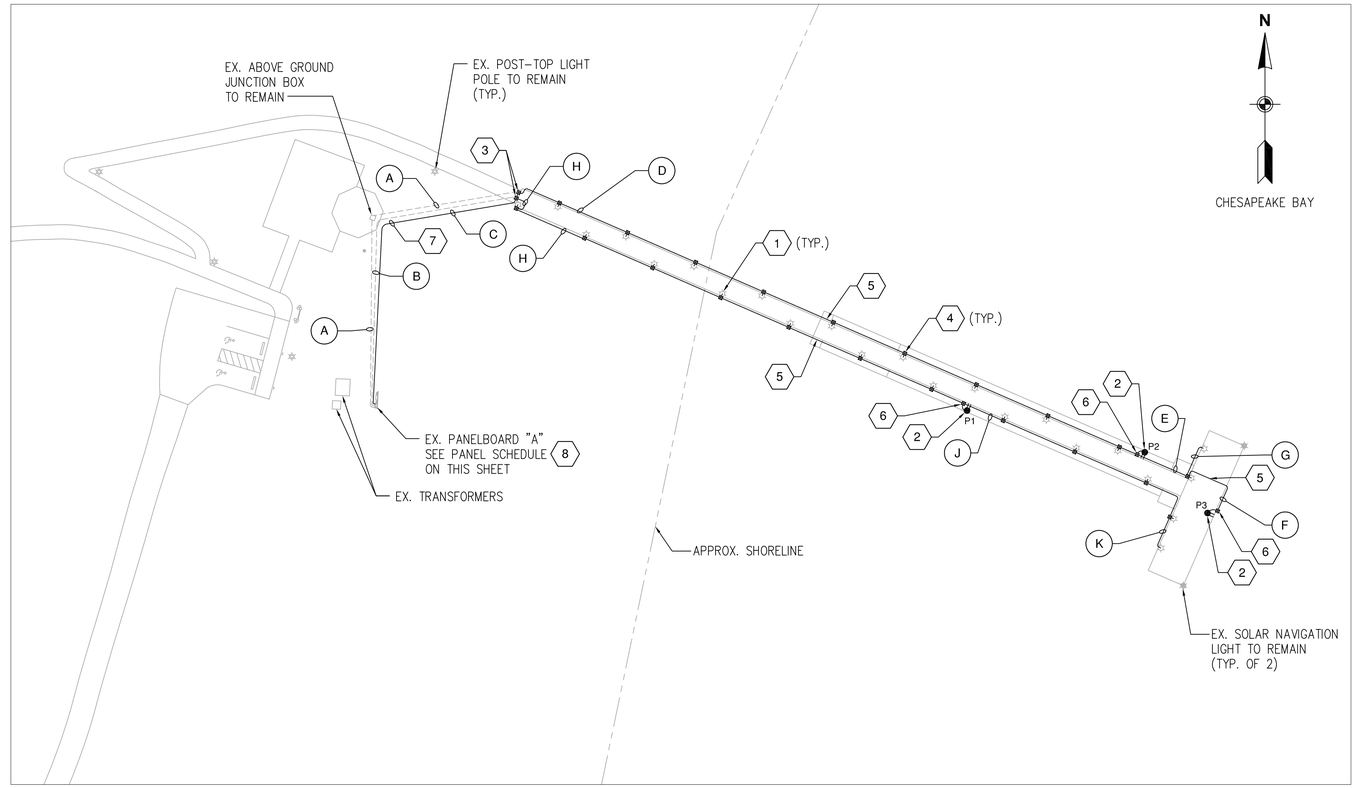

SITE PLAN
SCALE: 1"=30'-0"

LEGEND:

- EXISTING 50 WATT, METAL HALIDE STEPLIGHT
- EXISTING POST-TOP LIGHT POLE TO REMAIN
- EXISTING SOLAR POWERED NAVIGATION LIGHT TO REMAIN
- EXISTING JUNCTION BOX TO REMAIN
- NEW JUNCTION BOX. SIZED AS INDICATED
- P1 — EATON MARINA "LIGHTHOUSE - SS" MARINE SHORE POWER PEDESTAL
  "P1" INDICATES PEDESTAL IDENTIFICATION NUMBER
  EACH PEDESTAL CONFIGURED AS FOLLOWS:
  STAINLESS STEEL ENCLOSURE, FACTORY PAINTED WHITE
  (1) 50A, 240V TWIST-LOCK RECEPTACLE W/CIRCUIT BREAKER
  (1) 30A, 120V TWIST-LOCK RECEPTACLE W/CIRCUIT BREAKER
  (1) 20A, 120V GFI DUPLEX RECEPTACLE W/CIRCUIT BREAKER
  PHOTOCELL CONTROLLED LED LIGHTING W/CIRCUIT BREAKER, CLEAR LENS

SITE PLAN KEY NOTES:

1. EXISTING 50W METAL HALIDE STEPLIGHTS (TYPICAL OF 23).
2. PROVIDE NEW EATON MARINA "LIGHTHOUSE-SS" MARINE SHORE POWER PEDESTAL.
3. PROVIDE TWO (2) 20"x18"x8" JUNCTION BOXES INSTALLED ABOVE GRADE ON EXISTING CONDUIT STUB-UPS UNDER PIER. PROVIDE A 2" CONDUIT CONNECTING BOTH JUNCTION BOXES ABOVE GRADE. PROVIDE A CONDUIT, SIZED AS SHOWN, OUT OF EACH JUNCTION BOX AND TRANSITION FROM UNDER PIER, TO BACK SIDE OF BOTH PIER RAILINGS. SEE STRUCTURAL DRAWINGS FOR CONDUIT MOUNTED ON RAILING DETAILS.
4. PROVIDE A 23"x11"x7" NEMA 4X POLYCARBONATE SCREW COVER JUNCTION BOX MOUNTED TO BACK OF POST BEHIND EACH STEPLIGHT FOR SPLICING OF LIGHTING CIRCUITS. PROVIDE A 3/4" SEALTIGHT FLEXIBLE METAL CONDUIT FROM JUNCTION BOX TO BOTTOM OF EXISTING STEPLIGHT FIXTURE HOUSING, REUSING THE PREVIOUS CONDUIT PENETRATION LOCATION IN THE HOUSING (TYPICAL FOR ALL BUT THE LAST STEP-LIGHT ON EACH CIRCUIT).
5. CONDUIT SHALL BE ROUTED BENEATH PIER DECKING AS REQUIRED AT THESE LOCATIONS ONLY.
6. PROVIDE A 23"x11"x7" NEMA 4X POLYCARBONATE SCREW COVER JUNCTION BOX.
7. PROVIDE A NEW 2" PVC SCHEDULE 80 CONDUIT, A MINIMUM OF 24" BELOW GRADE, FROM PANELBOARD "A" TO NEW JUNCTION BOX UNDER BEGINNING OF PIER, FOR ROUTING OF LIGHTING CIRCUITS.
8. PROVIDE TWO (2) 50A, 2P CIRCUIT BREAKERS FOR MARINE SHORE POWER PEDESTALS "P1" AND "P2". REUSE EXISTING 50A, 2P CIRCUIT BREAKER FOR MARINE SHORE POWER PEDESTAL "P3". VERIFY AND REUSE EXISTING CIRCUIT BREAKERS FOR PIER RIGHT AND LEFT STEP-LIGHT CIRCUITS. MAINTAIN ALL OTHER CIRCUITS AND CIRCUIT BREAKERS AT PANELBOARD "A".

WIRING SCHEDULE

CALLOUT	IN CONDUIT	WIRING/CIRCUIT (*ALL WIRING IS NEW UNLESS OTHERWISE NOTED*)
A	EXISTING 2"	3 #1/0 & #1G FOR PEDESTAL P3 3 #1 & #2G FOR PEDESTAL P2
B	EXISTING 1-1/2"	3 #2 & #3G FOR PEDESTAL P1
C	NEW 2" GREY PVC SCHEDULE 80 (*UNDERGROUND*)	2 #6 & #6G FOR RIGHT SIDE STEPLIGHTING 2 #6 & #6G FOR LEFT SIDE STEPLIGHTING
D	NEW 2-1/2" GREY PVC SCHEDULE 80	3 #1/0 & #1G FOR PEDESTAL P3 3 #1 & #2G FOR PEDESTAL P2 2 #6 & #6G FOR LEFT SIDE STEPLIGHTING
E	NEW 2" GREY PVC SCHEDULE 80	3 #1/0 & #1G FOR PEDESTAL P3 2 #6 & #6G FOR LEFT SIDE STEPLIGHTING
F	NEW 2" GREY PVC SCHEDULE 80	3 #1/0 & #1G FOR PEDESTAL P3
G	NEW 3/4" GREY PVC SCHEDULE 80	2 #6 & #6G FOR LEFT SIDE STEPLIGHTING
H	NEW 2" GREY PVC SCHEDULE 80	3 #2 & #3G FOR PEDESTAL P1 2 #6 & #6G FOR RIGHT SIDE STEPLIGHTING
J	NEW 2" GREY PVC SCHEDULE 80	2 #6 & #6G FOR RIGHT SIDE STEPLIGHTING
K	NEW 3/4" GREY PVC SCHEDULE 80	2 #6 & #6G FOR RIGHT SIDE STEPLIGHTING

15' 0 15' 30'
SCALE: 1" = 30'-0"

JOHNSON, MIRMIRAN & THOMPSON
72 Loveton Circle
Sparks, Maryland
21152
phone / 410.329.3100
fax / 410.472.2200
www.jmt.com
ENGINEERING . PLANNING . ENVIRONMENTAL
CONSTRUCTION MANAGEMENT . WATER/WASTEWATER
SURVEYING . LANDSCAPE ARCHITECTURE
ARCHITECTURE . GEOTECHNICAL
FACILITIES ENGINEERING . INFORMATION TECHNOLOGY

©2010 ALL RIGHTS RESERVED

SWAN HARBOR FARM PARK
PIER IMPROVEMENTS
DEPARTMENT OF PARKS AND RECREATION
HARFORD COUNTY, MARYLAND

seal:

STATE OF MARYLAND — MICHAEL H. WHITE — No. 13253 — REGISTERED PROFESSIONAL ENGINEER

7-12-2016

PROFESSIONAL CERTIFICATION. I HEREBY CERTIFY THAT THESE DOCUMENTS WERE PREPARED OR APPROVED BY ME, AND THAT I AM A DULY LICENSED PROFESSIONAL ENGINEER UNDER THE LAWS OF THE STATE OF MARYLAND.
LICENSE NO. 13253, EXPIRATION DATE: 12-17-16

job number	13-1335-002
scale	AS NOTED
drawn by	SML
designed by	SML
checked by	WHM
no. date	07/07/2016
01	ISSUED FOR CONSTRUCTION

sheet title:
ELECTRICAL NEW WORK

sheet number:
E-02

Q:\SMD\00-StructuresFacilities\13-1335-002 Swan Harbor\CADD\Electrical\E-02 - Electrical New Work.dwg

MECHANICAL NOTES

UTILITIES:

1. CONTRACTOR IS TO VERIFY LOCATIONS OF ALL EXISTING UTILITIES PRIOR TO PERFORMING ANY WORK ON THIS PIER.
2. PROTECTION: PROTECT EXISTING UTILITIES TO REMAIN DURING CONSTRUCTION, AND CUTTING AND PATCHING, TO PREVENT DAMAGE.
3. DAMAGES: PROMPTLY REPAIR DAMAGES CAUSED TO ADJACENT FACILITIES BY CONSTRUCTION WORK AT NO COST TO THE OWNER.
4. IF UNANTICIPATED MECHANICAL ELEMENTS WHICH CONFLICT WITH THE INTENDED FUNCTION OR DESIGN ARE ENCOUNTERED, INVESTIGATE AND MEASURE BOTH NATURE AND EXTENT OF THE CONFLICT. SUBMIT REPORT TO OWNER'S REPRESENTATIVE IN WRITTEN, ACCURATE DETAIL. PENDING RECEIPT OF DIRECTIVE FROM OWNERS' REPRESENTATIVE, REARRANGE SCHEDULE AS NECESSARY TO CONTINUE OVERALL JOB PROGRESS WITHOUT DELAY.

ABANDON-IN-PLACE

1. ABANDON-IN-PLACE EXISTING WATER SERVICE PIPE ON THE PIER.
2. ALL ABANDONED PIPE MUST BE PURGED OF ANY WATER, THEN PROPERLY SEALED.
3. CUTTING: CUT EXISTING CONSTRUCTION USING METHODS LEAST LIKELY TO DAMAGE ELEMENTS TO BE RETAINED OR ADJOINING CONSTRUCTION. IN GENERAL, WHERE CUTTING IS REQUIRED, USE HAND OR SMALL POWER TOOLS DESIGNED FOR SAWING OR GRINDING, NOT HAMMERING AND CHOPPING. CUT HOLES AND SLOTS NEATLY TO SIZE REQUIRED WITH MINIMUM DISTURBANCE OF ADJACENT SURFACES. TEMPORARILY COVER OPENINGS WHEN NOT IN USE.
4. IT IS THE RESPONSIBILITY OF THE CONTRACTOR TO LOCATE ALL UTILITIES THAT ARE INVOLVED IN THE PIER RENOVATION AND COORDINATE ANY REMOVAL OR RELOCATION WITH THE OWNERS REPRESENTATIVE AT NO ADDITIONAL COST TO OWNER.
5. DISPOSAL OF DEMOLISHED MATERIALS: REMOVE DEBRIS, RUBBISH AND OTHER MATERIALS RESULTING FROM EXCAVATION AND/OR DEMOLITION OPERATIONS FROM THE CONSTRUCTION SITE. TRANSPORT AND LEGALLY DISPOSE OF MATERIALS OFF SITE.

EXISTING CONDITIONS:

THE CONTRACTOR IS ADVISED THAT ALL PLANS, DIMENSIONS AND DETAILS OF EXISTING CONSTRUCTION HAVE BEEN TAKEN FROM BEST AVAILABLE PLANS. THE CONTRACTOR SHALL VERIFY BY FIELD MEASUREMENT ALL PLANNED DIMENSIONS OF NEW CONSTRUCTION IN RELATION TO EXISTING PIER ELEVATIONS AND DIMENSIONS PRIOR TO THE PREPARATION OF SHOP DRAWINGS. ANY DEVIATIONS IN PLANNED DIMENSIONS FROM THE CONTRACT DOCUMENTS SHALL BE APPROVED BY THE ENGINEER OF RECORD PRIOR TO PROCEEDING WITH THE MECHANICAL WORK.

SHOP DRAWINGS:

SHOP DRAWINGS FOR ALL MECHANICAL ELEMENTS SHOWN ON THE CONTRACT DOCUMENTS MUST BE SUBMITTED BY THE MECHANICAL CONTRACTOR AND REVIEWED BY THE ENGINEER. ALL CONTRACTOR MODIFICATIONS (INCLUDING PRODUCT SUBMISSION) MUST BE IDENTIFIED IN WRITING AS PROPOSED "AS EQUAL" CHANGES AT TIME OF SUBMISSION. IF A CONTRACTOR OR OWNER FAILS TO SUBMIT THE SHOP DRAWINGS OR FAILS TO FOLLOW THE ABOVE "AS EQUAL" PROCEDURE, JMT WILL NOT BE RESPONSIBLE FOR THE MECHANICAL CERTIFICATION AND DESIGN OF THE PROJECT. SHOP DRAWINGS ARE REVIEWED BY THE ENGINEER AS A CONVENIENCE TO THE CONTRACTOR AND ARE NOT A CONTRACT DOCUMENT.

INSPECTION:

THE CONTRACTOR SHALL HIRE AN EXPERIENCED QUALIFIED INSPECTOR TO PERFORM ALL REQUIRED INSPECTION WORK. INSPECTION SHALL CONSIST OF, BUT NOT BE LIMITED TO, VISUAL OBSERVATIONS OF MATERIALS, EQUIPMENT OR CONSTRUCTION WORK FOR THE PURPOSE OF ASCERTAINING THAT THE WORK IS IN SUBSTANTIAL CONFORMANCE WITH THE CONTRACT DOCUMENTS WITH THE DESIGN INTENT AND LOCAL JURISDICTION. THE ENGINEER WILL NOT PERFORM THE REQUIRED INSPECTION AS PART OF THIS PRESENT CONTRACT WITH THE OWNER. UNDER THIS PRESENT CONTRACT, THE ENGINEER MAY VISIT THE SITE TO ASCERTAIN MECHANICAL CONFORMANCE TO THE CONTRACT DOCUMENTS. HOWEVER, SUCH VISITS SHALL NOT BE RELIED UPON BY OTHERS AS ACCEPTANCE OF THE WORK, NOR SHOULD IT BE CONSTRUED TO RELIEVE THE CONTRACTOR IN ANY WAY FROM HIS/HER OBLIGATIONS AND RESPONSIBILITIES UNDER THE CONSTRUCTION CONTRACT.

OWNERSHIP OF DOCUMENTS:

THE CONTRACTOR ACKNOWLEDGES THESE PLANS AND SPECIFICATIONS PREPARED BY JMT AS INSTRUMENTS OF PROFESSIONAL SERVICE. NEVERTHELESS, THE PLANS AND SPECIFICATIONS PREPARED UNDER THIS AGREEMENT SHALL REMAIN THE PROPERTY OF JMT. UPON COMPLETION OF THE WORK, THE CONTRACTOR AGREES TO HOLD HARMLESS AND INDEMNIFY AGAINST ALL DAMAGES, CLAIMS, AND LOSSES, INCLUDING DEFENSE COSTS, ARISING OUT OF ANY REUSE OF THE PLANS AND SPECIFICATIONS WITHOUT THE WRITTEN AUTHORIZATION OF JMT.

PIPE:

SCH. 80 PVC:

1. PIPING SHALL BE SCH. 80, PVC CORROSION RESISTENT PIPE, IPS SIZES 1-1/4"ø AND 4"ø FOR USE AT TEMPERATURES UP TO AND INCLUDING 140°F.
2. ALL PVC SCHEDULE 80 PIPE SHALL BE MANUFACTURED FROM A TYPE I, GRADE I POLYVINYL CHLORIDE (PVC) COMPOUND WITH A CELL CLASSIFICATION OF 12454 PER ASTM D1784
3, PIPE MUST HAVE A FLAME SPREAD RATING OF 0-25 WHEN TESTED FOR SURFACE BURNING CHARACTERISTICS IN ACCORDANCE WITH CAN/ULC-S102-2-M88 OR EQUAL.
4. LEAK TESTING REQUIRED FOR THE SUCTION LINE. ALL CONNECTIONS MUST BE AIR TIGHT, IF SUCTION PIPE CAN SUCK AIR, THE PUMP WILL NOT BE ABLE TO PULL.

TABLE 1.1: SCH. 80 PVC PIPE PROPERTIES

NOM. SIZE (in.)	O.D. (in.)	AVG. I.D. (in.)	MIN. WALL (in.)	LB/FT	Wwfp*	MAX psi
1 1/4	1.660	1.255	0.191	0.586	11.52	520
4	4.500	3.789	.337	2.938	15.00	320

Wwfp*-INDICATES WEIGHT OF WATER FILLED PIPE

1-1/4"ø SINGLE BRAIDED HOSE (SB1)

1. MANUFACTURER: FLEXICFAFT INDUSTRIES
2. SB1 HOSE SHALL HAVE A PRESSURE RATING OF 531PSI AND A BEND RADIUS OF 12 INCHES.
3. A 1-1/4"ø MALE ADAPTER TO BE WELDED BY MANUFACTURER ON THE SUCTION END OF HOSE.
4. MATERIAL OF CONSTRUCTION: 316 STAINLESS STL.

FISHING STATION PUMP:

1. PITCHER PUMP

- MANUFACTURER: WATER SOURCE LLC
- MANUFACTURERS PRODUCT NO.: PP500NL
- FLOW RATE: 1 GALLON/10 STROKES
- WEIGHT 19 LBS.
- MATERIAL OF CONSTRUCTION: CAST IRON
- MAXIMUM LIFT: 25 FT.
  *DEDUCT FROM THE ALLOWABLE SUCTION LIFT, ONE FOOT FOR EVERY 50FT. OF HORIZONTAL PIPE DISTANCE

FREEZE PROTECTION

1. HANDLE MUST BE LEFT IN 'UP' POSITION TO ALLOW SELF-DRAINAGE.
2. PLACE TRUE UNION BALL VALVE (HV-001) IN NORMALLY CLOSED (N.C.) POSITION.
3. PLACE TRUE UNION BALL VALVE (HV-002) IN NORMALLY OPEN (N.O.) POSITION.
4. 1-1/4"ø SCH. 80 PIPE, LOWER PIPE, SHALL HAVE A 1/4" SLOPE.

PUMP PRIMING

1. TO PRIME THE PITCHER PUMP, POUR WATER IN THE TOP OF THE PITCHER PUMP UNTIL WATER RUNS OUT OF THE SPOUT.
2. WAIT 5 MINUTES UNTIL THE CUP LEATHER SWELLS ENOUGH TO MAKE CONTACT WITH THE PUMP WALL.
3. RAISE AND LOWER THE HANDLE IN SHORT STROKES UNTIL SUCTION PIPE FILLS WITH WATER AND PUMP IS PRIMED.
4. IF NECESSARY ADD MORE WATER.
5. A TRUE UNION BALL CHECK VALVE SHALL BE INSTALLED, IN LIEU OF A FOOT VALVE, TO MAINTAIN PERMANENT PRIME.

VALVES: SEE PIPE ELEVATION 8/M-02, M-02

BALL VALVES:

1. TWO(2) 1-1/4" TRUE UNION BALL VALVES REQUIRED:
   A. HV-001: NORMALLY OPEN (N.O.) DURING NORMAL PUMP OPERATIONS SUPPLYING NON-POTABLE TO THE PITCHER PUMP. DURING WINTERIZATION THIS VALVE SHALL BE NORMALLY CLOSED.
   B. HV-002: NORMALLY CLOSED (N.C.) DURING NORMAL PUMP OPERATIONS SUPPLYING NON-POTABLE TO THE PITCHER PUMP. DURING WINTERIZATION THIS VALVE SHALL BE NORMALLY OPEN, TO ALLOW NON-POTABLE WATER FROM THE PITCHER PUMP TO DRAIN THRU THE PIPE AT 1/4" SLOPE, TO PREVENT FREEZING IN THE PUMP

- MANUFACTURER: HAYWARD INDUSTRIES
- MANUFACTURER'S P/N: TB1125STE
- CONNECTION TYPE:: SOCKET x SOCKET
- O-RING TYPE: EPDM
- MATERIAL OF CONSTRUCTION: SCH. 80 PVC
- PRESSURE RATING, psi: 250
- MAX. SERVICE TEMP, °F: 140
- COMPLIANCE: ASTM F 1970; NSF/ANSI STANDARD 14; NSF/ANSI STANDARD 61, ANNEX G

CHECK VALVE: SEE PIPE ELEVATION 8/M-02, M-02

1. 1 1/4" TRUE UNION BALL CHECK VALVE, HV-003.
2. STOPS THE FLOW OF WATER IN ONE DIRECTION WHILE ALLOWING FLOW IN THE OPPOSITE DIRECTION WITH MINIMUM TURBULENCE AND WHILE MAINTAINING PUMP PRIME

- MANUFACTURER: HAYWARD INDUSTRIES
- MANUFACTURER'S P/N: TC10125STE
- CONNECTION TYPE:: SOCKET x SOCKET
- O-RING TYPE: EPDM
- MATERIAL OF CONSTRUCTION: SCH. 80 PVC
- PRESSURE RATING, psi: 150
- MAX. SERVICE TEMP, °F: 140
- COMPLIANCE: ASTM F 1970; NSF/ANSI STANDARD 14; NSF/ANSI STANDARD 61, ANNEX G

PIPE CLAMPS:

1-1/4"ø PIPE CLAMPS

1. MANUFACTURER: COOPER B-LINE
2. PART NO. B3198H-1 1/4 OR EQUAL
3. HINGED EXTENSION SPLIT PIPE CLAMP TYPE.
4. TO HOLD IN PLACE VERTICAL 1-1/4"ø SCH. 80 PVC PIPE BEING SUSPENDED FROM THE EXISTING 5/4"x6" IPE DECK.
5. TO HOLD IN PLACE THE 1-1/4" QUICK DISCONNECT AND THE SINGLE BRAIDED STAINLESS STEEL FLEX HOSE (SB1), FROM THE 4"ø SCH. 80 PVC CYLINDER.
6. APPROVALS:

   CONFORMS TO FEDERAL SPECIFICATION WW-H-171E & A-A-1192A, TYPE 25 AND MANUFACTURERS STANDARDIZATION SOCIETY ANSI/MSS SP-69 & SP-58, TYPE 12.
7. MATERIAL: 316 STAINLESS STEEL
8. DESIGN LOAD: 180 LBS.

4"ø STAINLESS STL. ADJUSTABLE CLEVIS HANGER (CYLINDER CLAMP)

1. MANUFACTURER: COOPER B-LINE
2. PART NO. B3140-4 OR EQUAL
3. TO HOLD IN PLACE THE VERTICAL 4"ø SCH. 80 PVC CYLINDER BEING ATTACHED TO THE EXISTING 12"ø PIER.
4. APPROVALS:
   - UNDERWRITERS LABORATORIES LISTED IN THE USA(UL)
   - APPROVED BY FACTORY MUTUAL ENGINEERING (FM)
   - CONFORMS TO FEDERAL SPECIFICATION WW-H-171E & A-A-1192A, TYPE 4
   - MANUFACTURERS STANDARDIZATION SOCIETY ANSI/MSS SP-69 & SP-58, TYPE 4
5. MATERIAL: 316 STAINLESS STEEL
6. DESIGN LOAD:
   1040LBS @ 650°F
   810LBS @ 750°F

12"ø STAINLESS STL. ADJUSTABLE CLEVIS HANGER (PILE CLAMP)

1. MANUFACTURER: COOPER B-LINE
2. PART NO. B3140-12 OR EQUAL
3. TO HOLD IN PLACE THE VERTICAL 4"ø SCH. 80 PVC CYLINDER BEING ATTACHED TO THE EXISTING 12"ø PILE.
4. COMPLIANCE:
   - UNDERWRITERS LABORATORIES LISTED IN THE USA(UL)
   - APPROVED BY FACTORY MUTUAL ENGINEERING (FM)
   - CONFORMS TO FEDERAL SPECIFICATION WW-H-171E & A-A-1192A, TYPE 4
   - MANUFACTURERS STANDARDIZATION SOCIETY ANSI/MSS SP-69 & SP-58, TYPE 4
5. MATERIAL: 316 STAINLESS STEEL
6. DESIGN LOAD:
   2490LBS @ 650°F
   1950LBS @ 750°F

FLANGES:

1. 4" FLANGE ONE PIECE SOCKET
- MANUFACTURER: SPEARS INC.
- MANUFACTURER'S P/N: 851-040
- MATERIAL OF CONSTRUCTION: GRAY, SCH. 80 PVC
- CLASS: SCH. 80 PVC
- RATING: 150; 150PSI @ 73°

2. 4" BLIND FLANGE (SEE DETAIL 5/M-02, M-02)
- MANUFACTURER: SPEARS INC.
- MANUFACTURER'S P/N: *1099 (FABRICATED BY MANUFACTURER)
- MATERIAL OF CONSTRUCTION: GRAY, SCH. 80 PVC
- CLASS: SCH. 80 PVC
- RATING: 150; 150PSI @ 73°

3. CONFORMANCE STANDARDS:
- ASTM D 2467 (PVC)
- ASTM D 1784 (PVC CELL CLASSIFICATION 12454-B)

4. FLANGE BOLTS:
- (8) 5/8-11 ASTM F593-13A 316 STAINLESS STL.
- TORQUE FACTOR: 25 FT-LBS
- TORQUE TIGHTENING SEQUENCE: 1-2, 3-4, 5-6, 7-8

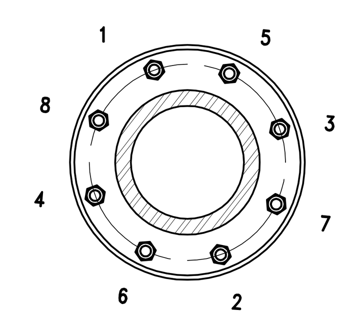

5. FLANGE NUTS:
- (8) 5/8 HEX, ASTM F594-09(2015) 316 STAINLESS STL.

6. FLANGE GASKET: (SEE DETAIL 4/M-02, M-02)
- MANUFACTURER: TWP INDUSTRIES
- MANUFACTURER'S P/N: D9.062W4X.047w/HOLES
- WIRE DIAMETER: .0470"ø
- OPENING SIZE: 0.2030 IN.
- MATERIAL OF CONSTRUCTION: 4 MESH T304 STAINLESS STL. DISC W/ 9-1/16"ø
- HOLE PATTERN: ANSI B16.5, ASTM D4024, CLASS 150

7. FLANGE WASHERS:
- (16) 5/8 SS316 FLAT WASHERS

8. SOLVENT WELDING:
- SUFFICIENT CEMENT MUST BE APPLIED TO FILL GAP BETWEEN PIPE AND FITTINGS
- INSTALLATION MUST BE MADE WHILE THE SURFACES ARE STILL WET AND CEMENT IS STILL FLUID
- USE A SUITABLE PRIMER WHICH WILL ACT TO PENETRATE AND SOFTEN THE SURFACES MORE QUICKLY THAN CEMENT ALONE

9, SEALANT:
- MANUFACTURER: WELD-ON ADHESIVES, INC.
- ITEM : WELD-ON 724
- COMPLIANCE: ASTM F 493 STANDARD; NSF/ANSI STANDARD 61; NSF/ANSI STANDARD 14

10. PRIMER
- MANUFACTURER: WELD-ON ADHESIVES, INC.
- ITEM : P-70 PRIMER
- COMPLIANCE: ASTM F 656; NSF/ANSI STANDARD 61; NSF/ANSI STANDARD 14

1-1/4" QUICK DISCONNECT: (SEE DETAIL 7/M-02, M-02)

1. FOR USE DURING PUMP MAINTENANCE AND EMERGENCIES.
2. 1-1/4" FEMALE COUPLER x 1-1/4" HOSE SHANK
- MANUFACTURER: BANJO CORPORATION
- MANUFACTURER'S P/N: 125CSS
- MATERIAL OF CONCTRUCTION: 316 STAINLESS STL.

3. 1-1/4" MALE COUPLER x 1-1/4" FEMALE THREAD
- MANUFACTURER: BANJO CORPORATION
- MANUFACTURER'S P/N: 125ASS
- MATERIAL OF CONCTRUCTION: 316 STAINLESS STL.

ENCLOSURE LOCK OUT-(MECHANICAL CONTRACTOR'S OPTION)

1. WARDED PADLOCK
2. MASTERLOCK HASP
3. ACCESS DOOR HINGE

*SELECTIONS MUST BE APPROVED BY ENGINEER

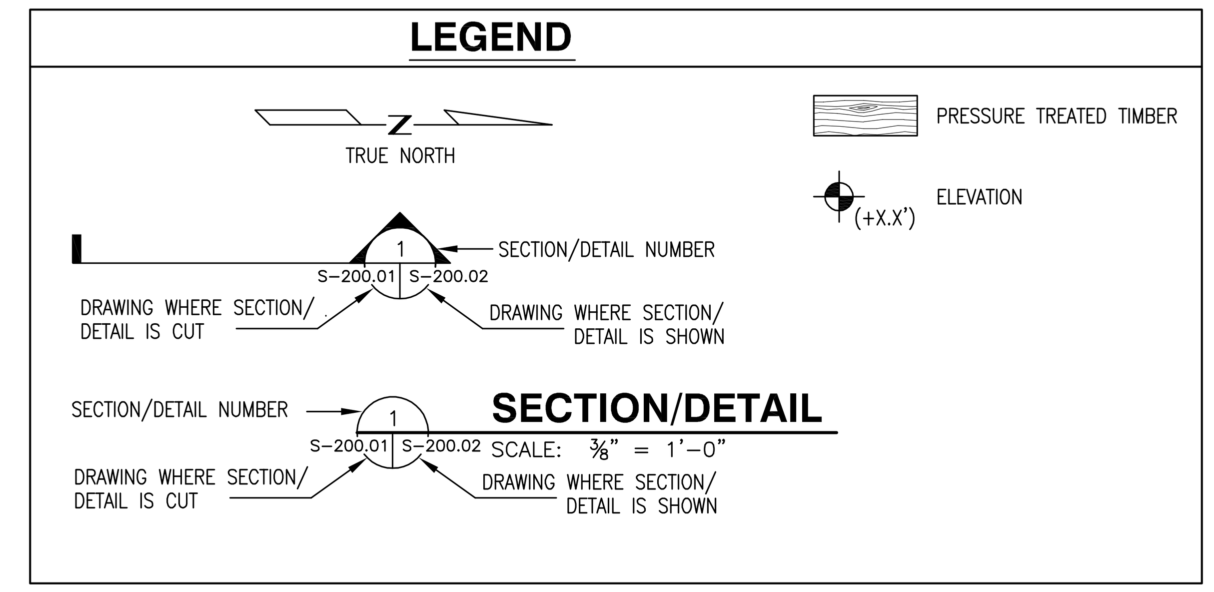

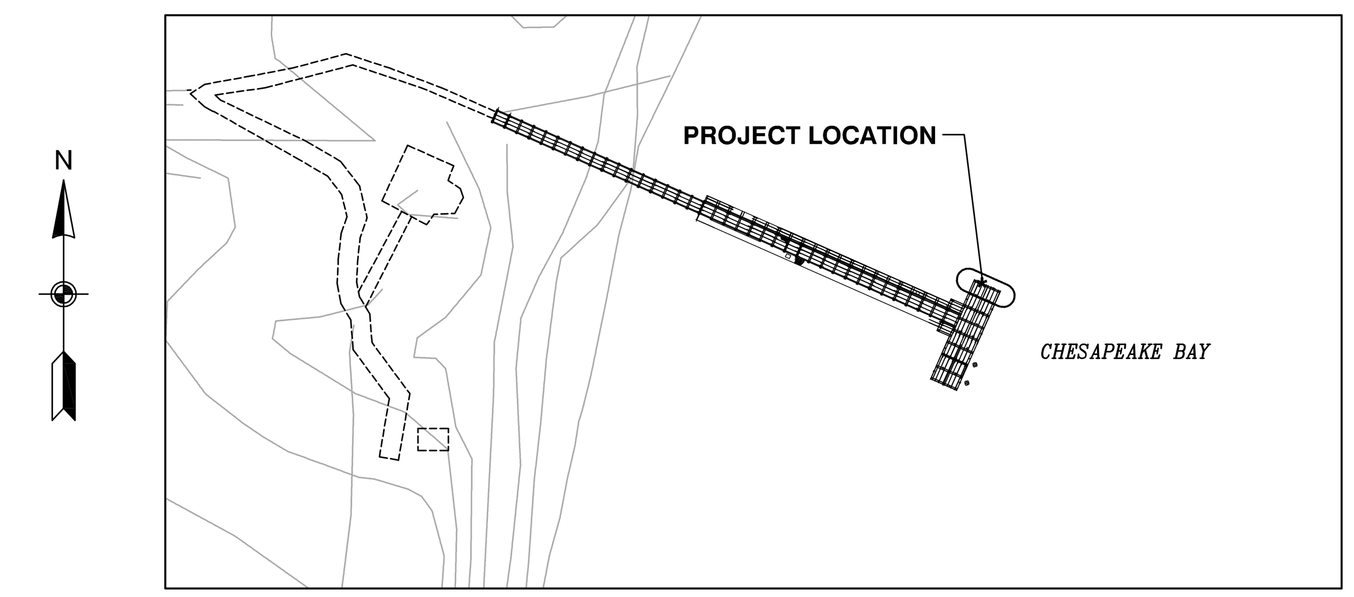

KEY PLAN

SCALE: N.T.S.

FISHING STATION ENCLOSURE

1. REMOVE ALL ATTACHMENTS AND GRIND SMOOTHE ALL SURFACES OF THE EXISTING FISHING STATION TROUGH. RE-USE TROUGH.
2. AFTER FINAL ASSEMBLY BREAK AND DEBUR ALL SHARP EDGES,
3. FRONT AND SIDE PANELS FOR FISHING STATION ENCLOSURE.

   1/8" 6061 PERFORATED ALUMINUM SHEET
   - SUPPLIER: METAL SUPERMARKETS INC.
   - HOLE TYPE: 1/4"ø ON 3/8" STAGGERED CENTER
   - WEIGHR PER SQ. FT. 1.07
   - COMPLIANCE: QQ-A-250
4. FRAMING AND BRACING FOR FISHING STATION ENCLOSURE

   2"x2"x 1/4" SQUARE TUBING 6060-T6 ALUMINUM
   - MANUFACTURER: METAL SUPERMARKETS INC.
   - MANUFACTURER'S P/N: ATSQ6061/2250
   - WEIGHT PER LINEAR FT. (LBS.) 2.0528
   - COMPLIANCE: AMS-QQ-A-200/8; ASTM B-221
5. FRAMING AND SUPPORT FOR FISHING STATION ENCLOSURE

   2"x2"x 1/4" ANGLE 6060-T6 ALUMINUM
   - MANUFACTURER: METAL SUPERMARKETS INC.
   - MANUFACTURER'S P/N: AA6061/2214
   - WEIGHT PER LINEAR FT. (LBS.) 1.10
   - COMPLIANCE: AMS-QQ-A-200/8; ASTM B-308
6. PITCHER PUMP SUPPORT PLATE

   12"x12"x 3/8" 6060-T6 ALUMINUM PLATE
   - MANUFACTURER: METAL SUPERMARKETS INC.
   - MANUFACTURER'S P/N: AP6061/375
   - WEIGHT PER SQ. FT. 5.44
   - COMPLIANCE: QQ-A-200/11; ASTM B-209

PIER FASTENERS:

- BOLTS: ASTM F593-13A 316 STAINLESS STL.
- NUTS: ASTM F594-09(2015) 316 STAINLESS STL.
- WASHERS: FLAT WASHER-316 STAINLESS STL.
- ALL-THREAD: 3/8-16UNC, 316 STAINLESS STL.

CLAMP ROD: SEE DETAIL 1/M-01, M-02:

1/2"ø COLD FINISH 316 STAINLESS STEEL ROUND BAR

- MANUFACTURER: METAL SUPERMARKETS INC.
- MANUFACTURER'S P/N: SR316/12
- WEIGHT PER LINEAR FT. (LBS.) .6759
- COMPLIANCE: AMS 5648, ASTM A182, ASTM A276; ASTM A479, QQ-S763

WELDING:

- ALL WELDS TO BE 1/4 FILLET ALL AROUND, UNLESS OTHERWISE NOTED

STAINLESS STEEL WELDING:

CODE COMPLIANCE:

- AWS D1.6/D1.6M:2007 STAINLESS STEEL (OR LATEST EDITION)

ALUMINUM WELDING:

CODE COMPLIANCE:

- AWS D1.2/D1.2M:2014 ALUMINUM (OR LATEST EDITION)

QUALIFICATIONS:

1. NO WELDER MAY ENGAGE IN A WELDING PROCESS UNLESS, WITHIN THE SIX (6) PRIOR CALENDAR MONTHS, HAS:
   - BEEN ENGAGED IN WELDING USING THAT PROCESS
   - HAD ONE WELDED TESTED, BY A QUALIFIED WELDING INSPECTOR AND FOUND ACCEPTABLE
2. ALL WELDERS MUST BE REQUALIFIED AT LEAST ONCE EACH YEAR.

ABBREVIATIONS

AISI	AMERICAN IRON AND STEEL INSTUTUTE
ANSI	AMERICAN NATIONAL STANDARDS INSTITUTE
ASTM	AMERICAN SOCIETY FOR TESTING MATERIALS
ASSY.	ASSEMBLY
CSA	CANADIAN STANDARDS ASSOCIATION
ø	DIAMETER
ELEV.	ELEVATION
FT.	FEET
FPT	FEMALE PIPE THREAD
GR.	GRADE
HEX	HEXAGON (6) SIDES
HP	HORSE POWER
MPT	MALE PIPE THREAD
MSS	MANUFACTURER STANDARDIZATION SOCIETY
MAX.	MAXIMUM
MHW	MEAN OF ALL HIGH WATER HEIGHTS DURING CURRENT TIDE
MLW	MEAN OF ALL LOW WATER HEIGHTS DURING CURRENT TIDE
N.C.	NATIONAL PIPE THREAD
N.O.	NORMALLY OPEN (VALVES)
NO.	NUMBER
NPT	NATIONAL PIPE THREAD
PSI	POUNDS PER SQUARE INCH
PVC	POLYVINYL CHLORIDE
P.T.	PRESSURE TREATED (TIMBER)
REF.	REFERENCE
SCH.	SCHEDULE
SB1	SINGLE BRAIDED
SOC	SOCKET
SS	STAINLESS STEEL
316SS	STAINLESS STEEL WITH 2% *MOLYBDENUM ADDED TO RESIST CHLORIDES (SALT WATER)
STL	STEEL
UL	UNDERWRITER'S LABORATORIES
CUL	UNDERWRITER'S LABORATORIES FOR CANADA
UNC	UNITED NATIONAL COARSE (THREAD)
V.I.F.	VERIFY IN FIELD
W/	WITH

JMT
JOHNSON, MIRMIRAN & THOMPSON
72 Loveton Circle
Sparks, Maryland
21152
phone / 410.329.3100
fax / 410.472.2200
www.jmt.com

ENGINEERING . PLANNING . ENVIRONMENTAL CONSTRUCTION MANAGEMENT . WATER/WASTEWATER SURVEYING . LANDSCAPE ARCHITECTURE ARCHITECTURE . GEOTECHNICAL FACILITIES ENGINEERING . INFORMATION TECHNOLOGY

©2010 ALL RIGHTS RESERVED

SWAN HARBOR FARM PARK
PIER IMPROVEMENTS
DEPARTMENT OF PARKS AND RECREATION
HARFORD COUNTY, MARYLAND

seal:

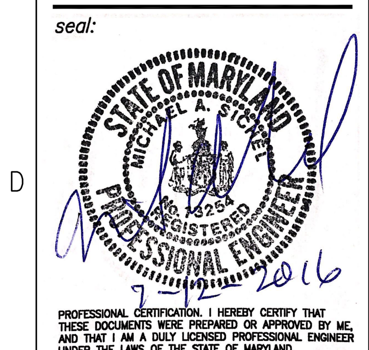

PROFESSIONAL CERTIFICATION. I HEREBY CERTIFY THAT THESE DOCUMENTS WERE PREPARED OR APPROVED BY ME, AND THAT I AM A DULY LICENSED PROFESSIONAL ENGINEER UNDER THE LAWS OF THE STATE OF MARYLAND.

LICENSE NO. 13254, EXPIRATION DATE: 12/18/16

job number	13-1335-002
scale	AS NOTED
drawn by	MAI
designed by	MAI
checked by	MS
no. date	07/07/2016
01	ISSUED FOR CONSTRUCTION

sheet title:

MECHANICAL NOTES, LEGEND & ABBREVIATIONS

sheet number:

M-00

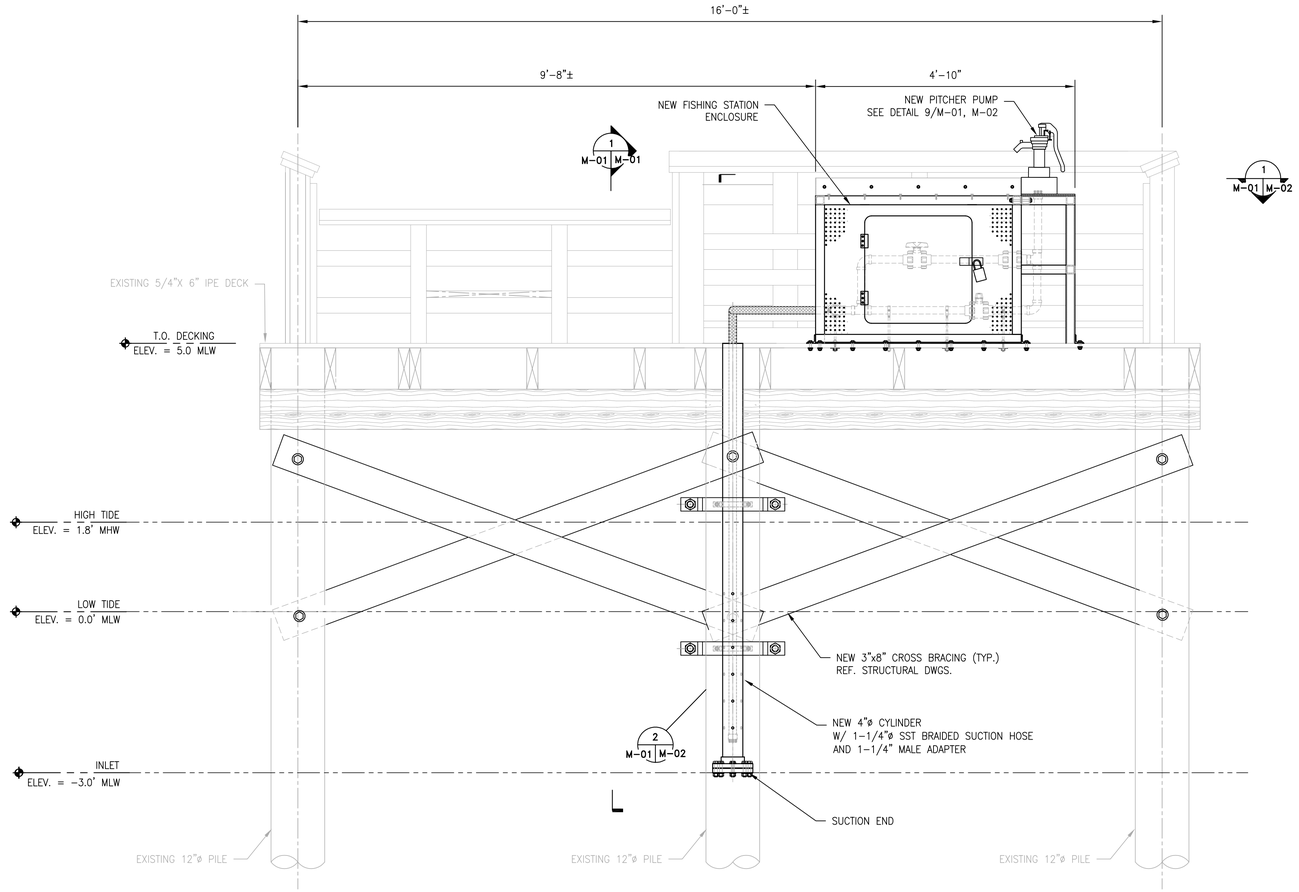

A M-01 FRONT ELEVATION-PROPOSED FISHING STATION

SCALE: ¾" = 1'-0"

NOTES:

1. TOTAL WEIGHT OF MECHANICAL EQUIPMENT AND ENCLOSURE NOT TO EXCEED 300lbs.

B M-01 EXISTING FISHING STATION

SCALE: NTS

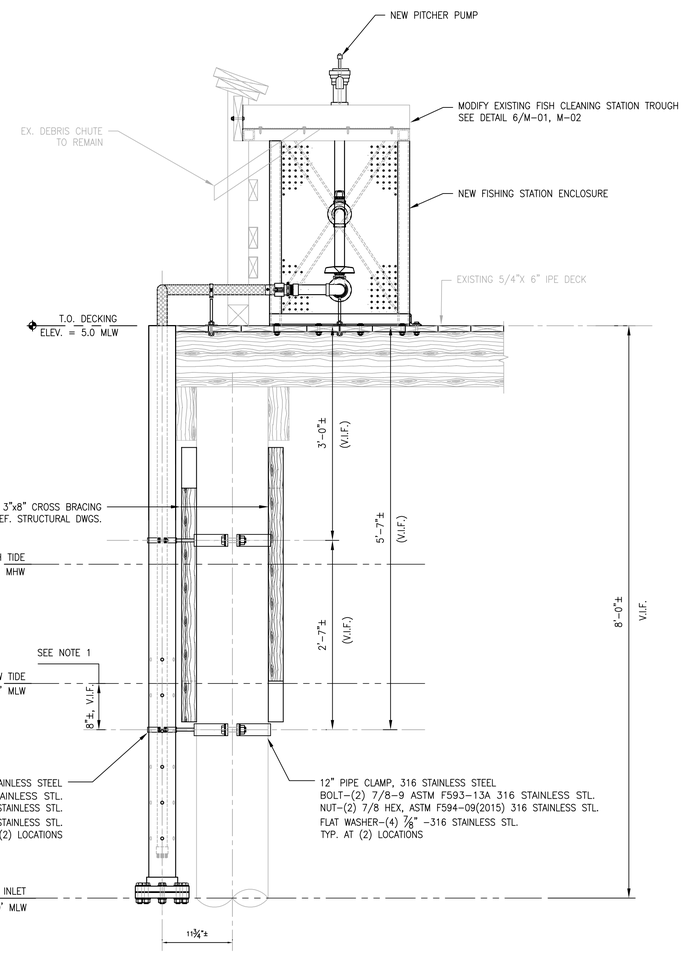

1 M-01 M-01 SIDE ELEVATION- FISHING STATION

SCALE: 1" = 1'-0"

NOTES:

1. INSTALLATION OF THE 12" PIPE CLAMP SHALL OCCUR AT LOW TIDE AND POSITIONED SNUG AGAINST THE 3"x8" CROSS BRACING. VERIFY THIS LOCATION IN FIELD.

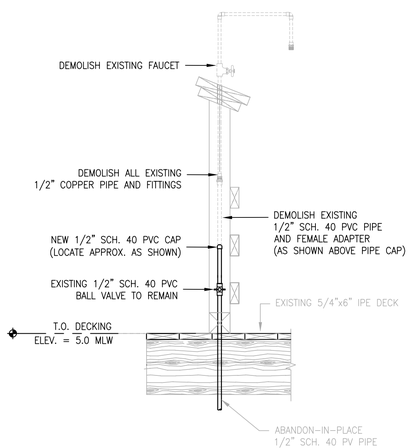

C M-01 DEMOLITION- FISHING STATION PIPING

SCALE: 1" = 1'-0"

6" 0 6" 12" 18"
SCALE: ¾" = 1'-0"

6" 0 6" 1'
SCALE: 1" = 1'-0"

JOHNSON, MIRMIRAN & THOMPSON

72 Loveton Circle
Sparks, Maryland
21152

phone / 410.329.3100
fax / 410.472.2200

www.jmt.com

ENGINEERING . PLANNING . ENVIRONMENTAL
CONSTRUCTION MANAGEMENT . WATER/WASTEWATER
SURVEYING . LANDSCAPE ARCHITECTURE
ARCHITECTURE . GEOTECHNICAL
FACILITIES ENGINEERING . INFORMATION TECHNOLOGY

©2010 ALL RIGHTS RESERVED

SWAN HARBOR FARM PARK
PIER IMPROVEMENTS
DEPARTMENT OF PARKS AND RECREATION
HARFORD COUNTY, MARYLAND

seal:

STATE OF MARYLAND — MICHAEL A. SPARE — No. 14154 — REGISTERED PROFESSIONAL ENGINEER

PROFESSIONAL CERTIFICATION. I HEREBY CERTIFY THAT THESE DOCUMENTS WERE PREPARED OR APPROVED BY ME, AND THAT I AM A DULY LICENSED PROFESSIONAL ENGINEER UNDER THE LAWS OF THE STATE OF MARYLAND.

LICENSE NO. 13254, EXPIRATION DATE: 12/18/16

job number	13-1335-002
scale	AS NOTED
drawn by	MAI
designed by	MAI
checked by	MS
no. date	07/07/2016
01	ISSUED FOR CONSTRUCTION

sheet title:
FISHING PIER STATION FRONT AND SIDE ELEVATIONS

sheet number:
M-01

Q:\SMD\00-StructuresFacilities\13-1335-002 Swan Harbor\CADD\Mechanical\M-01.dwg

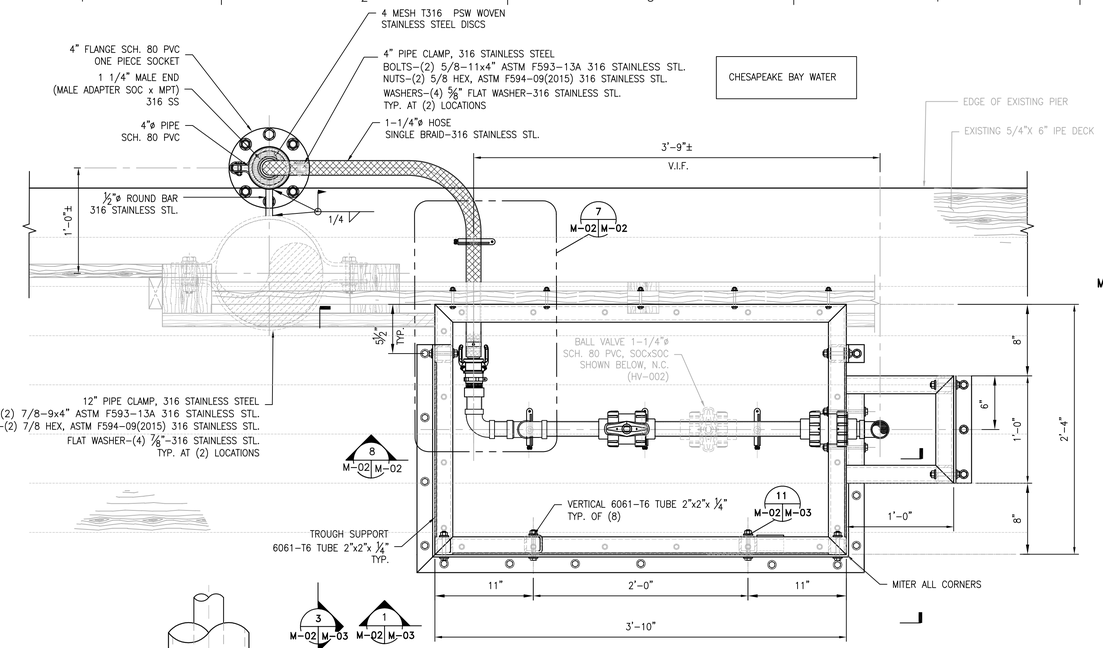

1 PLAN-PIPING TO PITCHER PUMP

M–01 M–02 SCALE: 1–1/2" = 1'–0"

NOTES:

1. TROUGH OMITTED FOR CLARITY.

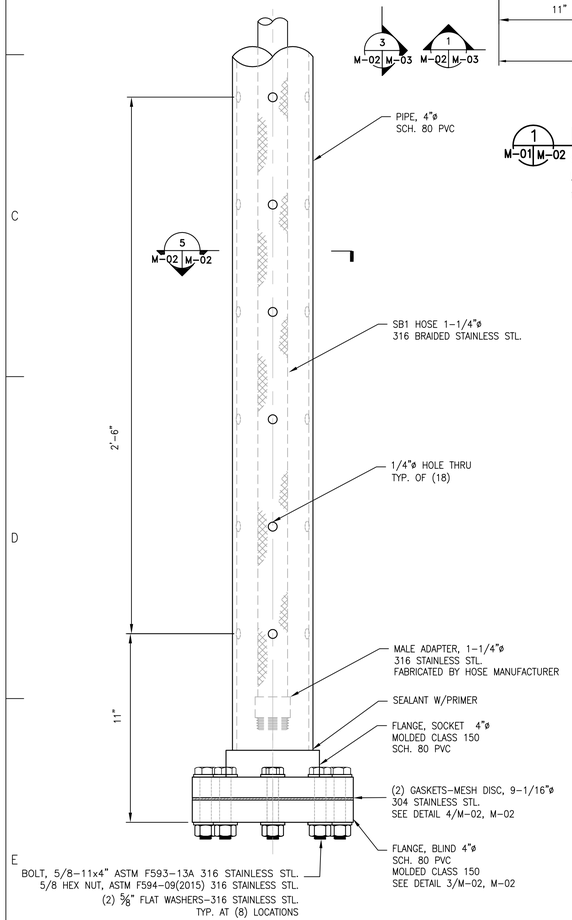

2 DETAIL-PIPING INLET

M–01 M–02 SCALE: 3" = 1'–0"

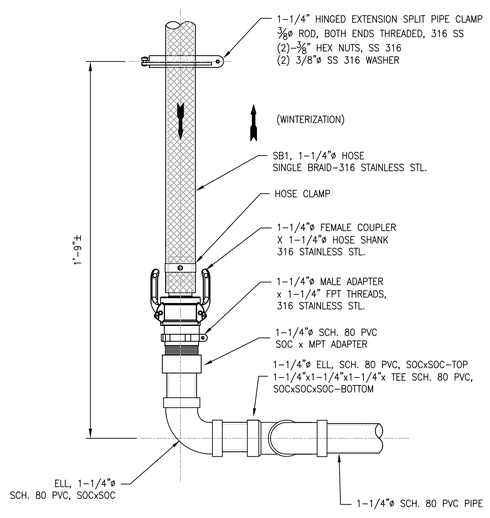

7 DETAIL-QUICK DISCONNECT

M–02 M–02 SCALE: 3" = 1'–0"

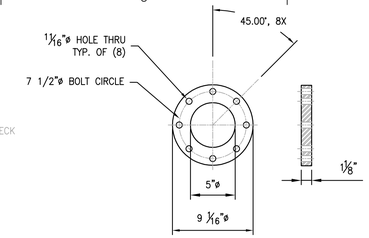

3 4"Ø BLIND FLANGE-SCH. 80 PVC

M–02 M–02 SCALE: 1–1/2" = 1'–0"

NOTES:

1. BOLT HOLE PATTERN TO BE IN ACCORDANCE WITH ANSI B16.5, ASTM D4024, 4"ø CLASS 150 FLANGE.

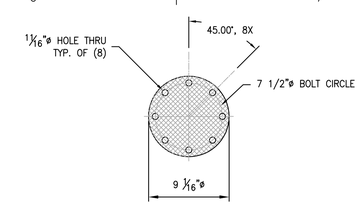

4 MESH T304 STAINLESS STEEL FILTER DISC

M–02 M–02 SCALE: 1–1/2" = 1'–0"

NOTES:

1. BOLT HOLE PATTERN TO BE IN ACCORDANCE WITH ANSI B16.5, ASTM D4024, 4"ø CLASS 150 FLANGE.
2. STAINLESS STEEL T304, 4 MESH W/ 0.047" WIRE DIA.
3. TWO(2) REQUIRED PER ASSEMBLY.

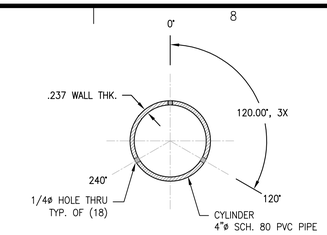

5 1/4" Ø HOLE LOCATIONS

M–02 M–02 SCALE: 3" = 1'–0"

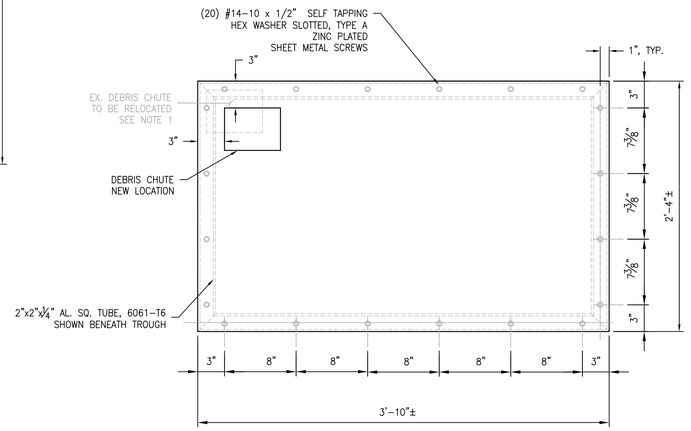

6 MODIFIED FISH CLEANING STATION TROUGH

M–01 M–02 SCALE: 1–1/2" = 1'–0"

NOTES:

1. RELOCATE EXISTING DEBRIS CHUTE TO NEW LOCATION APPROX. AS SHOWN. FABRICATE TO ALLOW FOR CLEARANCE OF CHUTE WITH NEW 2"x2" TUBE STEEL.
2. PATCH W/SIMILAR MATERIAL. WELD, GRIND SMOOTHE AND POLISH.
3. REMOVE ALL ATTACHMENTS ON TROUGH AND GRIND SMOOTHE ALL SURFACES OF THE EXISTING FISH CLEANING TROUGH.
4. BREAK AND DEBUR ALL SHARP EDGES.

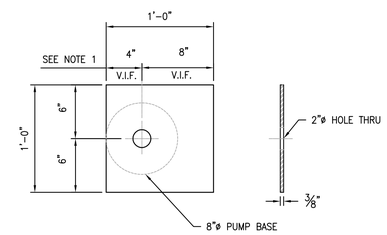

DETAIL- PITCHER PUMP SUPPORT PLATE

10 M–02 M–02 SCALE: 1–1/2" = 1'–0"

NOTES:

1. FIELD VERIFY LOCATION OF 2"ø HOLE.
2. LOCATE PITCHER PUMP TO ALLOW DISCHARE OF WATER TO FALL VERTCALLY WITHIN THE FISHING TROUGH DURING MINIMUM FLOW RATE.

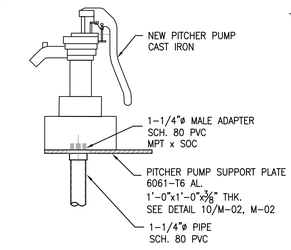

9 DETAIL- PITCHER PUMP

M–01 M–02 SCALE: 1–1/2" = 1'–0"

NOTES:

1. INSTALL PITCHER PUMP IN ACCORDANCE WITH MANUFACTURER'S RECOMMENDED INSTRUCTIONS.

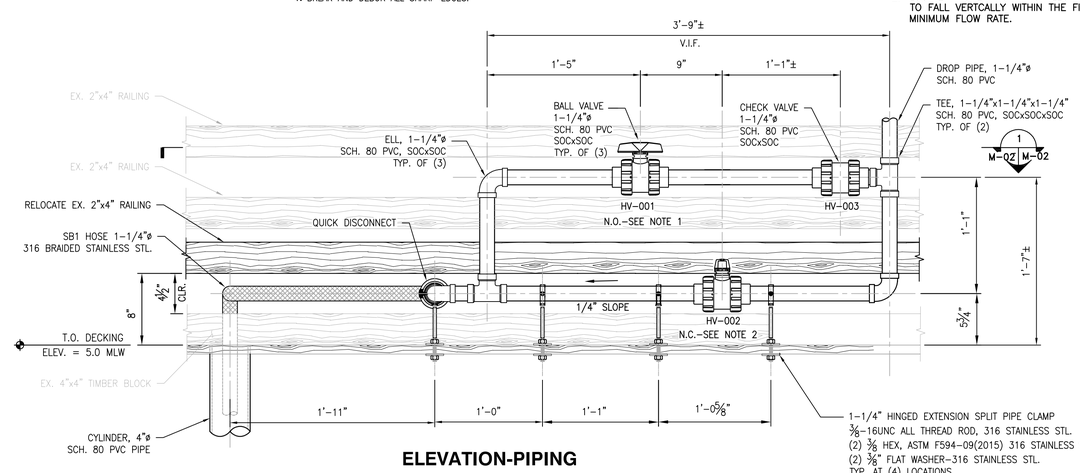

8 ELEVATION-PIPING CYLINDER TO PITCHER PUMP

M–02 M–02 SCALE: 1–1/2 = 1'–0"

NOTES:

1. NORMALLY OPEN, AS SHOWN, DURING NON–POTABLE WATER USAGE. NORMALLY CLOSED FOR WINTERIZATION.
2. NORMALLY CLOSED, AS SHOWN, DURING NON–POTABLE WATER USAGE. NORMALLY OPEN FOR DRAINAGE DURING WINTERIZATION.

3" 0 3" 6" 9"
SCALE: 1 1/2" = 1'–0"

2" 0 2" 4"
SCALE: 3" = 1'–0"

JOHNSON, MIRMIRAN & THOMPSON
72 Loveton Circle
Sparks, Maryland
21152
phone / 410.329.3100
fax / 410.472.2200
www.jmt.com
ENGINEERING . PLANNING . ENVIRONMENTAL CONSTRUCTION MANAGEMENT . WATER/WASTEWATER SURVEYING . LANDSCAPE ARCHITECTURE ARCHITECTURE . GEOTECHNICAL FACILITIES ENGINEERING . INFORMATION TECHNOLOGY

©2010 ALL RIGHTS RESERVED

SWAN HARBOR FARM PARK PIER IMPROVEMENTS

DEPARTMENT OF PARKS AND RECREATION
HARFORD COUNTY, MARYLAND

seal:

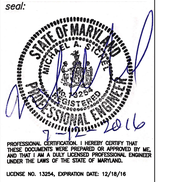

PROFESSIONAL CERTIFICATION. I HEREBY CERTIFY THAT THESE DOCUMENTS WERE PREPARED OR APPROVED BY ME, AND THAT I AM A DULY LICENSED PROFESSIONAL ENGINEER UNDER THE LAWS OF THE STATE OF MARYLAND.

LICENSE NO. 13254, EXPIRATION DATE: 12/18/16

job number	13–1335–002
scale	AS NOTED
drawn by	MAI
designed by	MAI
checked by	MS
no. date	07/07/2016
01	ISSUED FOR CONSTRUCTION

sheet title:

FISHING STATION
PARTIAL PIPING PLAN
& DETAILS

sheet number:

M-02

Q:\SMD\00–StructuresFacilities\13–1335–002 Swan Harbor\CADD\Mechanical\M–02.dwg

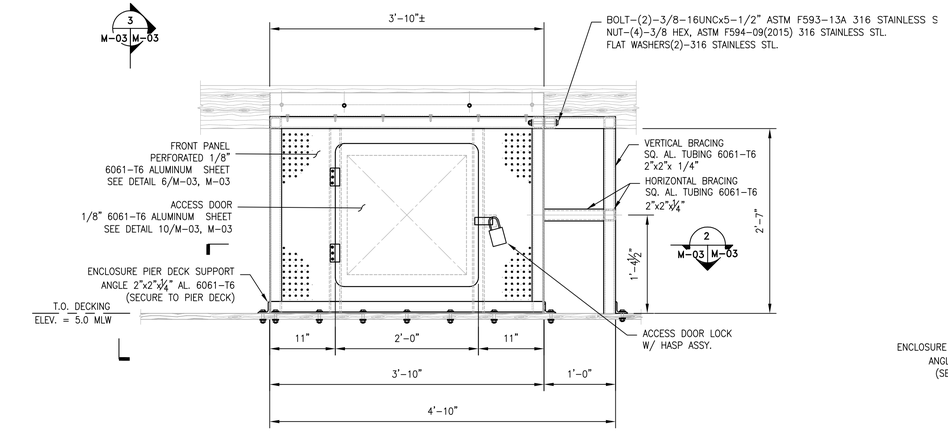

1 M-02 M-03 ENCLOSURE-FRONT ELEVATION

SCALE: 1" = 1'-0"

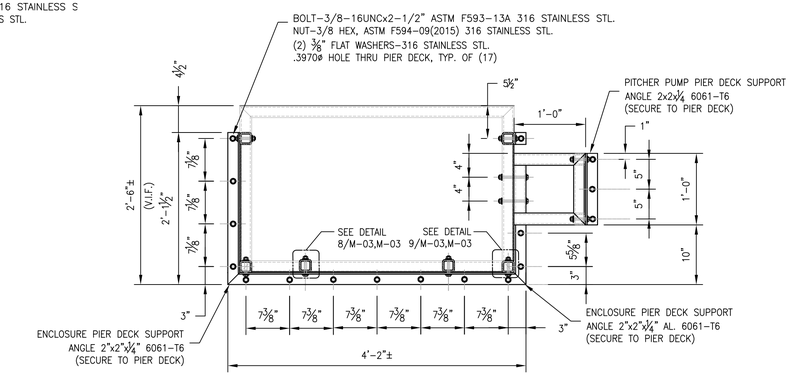

2 M-03 M-03 PLAN-LOWER ENCLOSURE SUPPORT

SCALE: 1" = 1'-0"

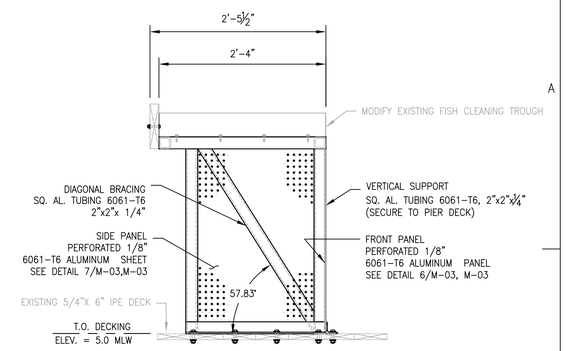

3 M-03 M-03 ENCLOSURE-LEFT SIDE ELEVATION

SCALE: 1" = 1'-0"

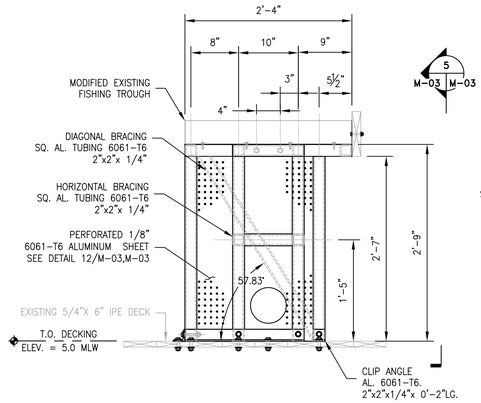

4 M-03 M-03 ENCLOSURE-RIGHT SIDE ELEVATION

SCALE: 1" = 1'-0"

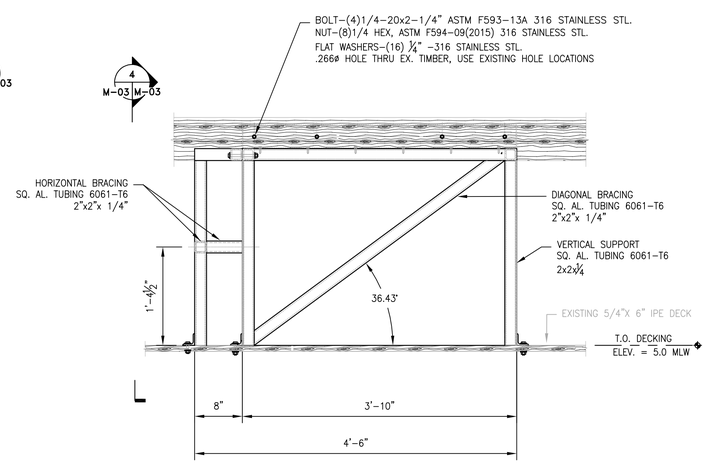

5 M-02 M-03 ENCLOSURE-REAR ELEVATION

SCALE: 1" = 1'-0"

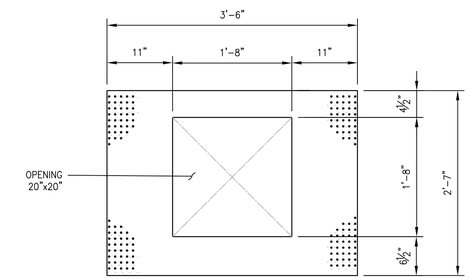

6 M-03 M-03 PANEL-FRONT

SCALE: 1" = 1'-0"

NOTES:

1. FABRICATED BY MANUFACTURER.

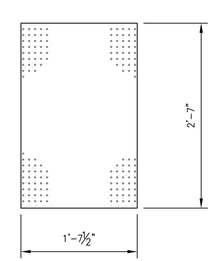

7 M-03 M-03 PANEL-SIDE LEFT

SCALE: 1" = 1'-0"

NOTES:

1. FABRICATED BY MANUFACTURER.

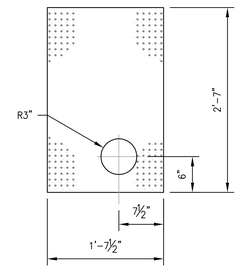

12 M-03 M-03 PANEL-SIDE RIGHT

SCALE: 1" = 1'-0"

NOTES:

1. FABRICATED BY MANUFACTURER.

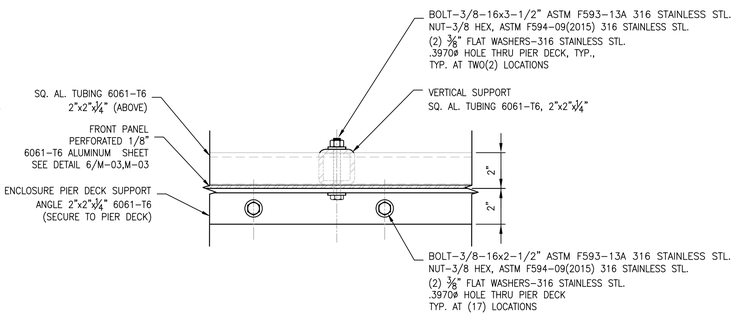

8 M-03 M-03 ENCLOSURE-FRONT SUPPORT

SCALE: 3" = 1'-0"

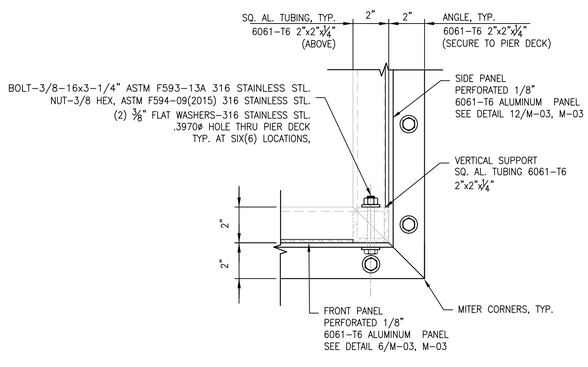

9 M-03 M-03 ENCLOSURE-CORNER SUPPORT

SCALE: 3" = 1'-0"

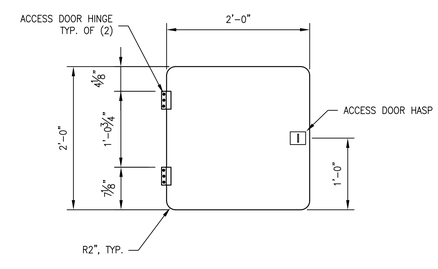

10 M-03 M-03 DETAIL-ACCESS DOOR

SCALE: 1" = 1'-0"

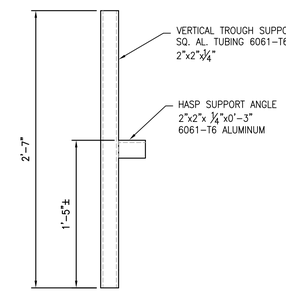

11 M-02 M-03 TUBING W/HASP SUPPORT

SCALE: 1 1/2" = 1'-0"

6" 0 6" 1'
SCALE: 1" = 1'-0"

3" 0 3" 6" 9"
SCALE: 1½" = 1'-0"

2" 0 2" 4"
SCALE: 3" = 1'-0"

JOHNSON, MIRMIRAN & THOMPSON

72 Loveton Circle
Sparks, Maryland
21152

phone / 410.329.3100
fax / 410.472.2200

www.jmt.com

ENGINEERING . PLANNING .
ENVIRONMENTAL
CONSTRUCTION MANAGEMENT .
WATER/WASTEWATER
SURVEYING . LANDSCAPE
ARCHITECTURE
ARCHITECTURE . GEOTECHNICAL
FACILITIES ENGINEERING .
INFORMATION TECHNOLOGY

©2010 ALL RIGHTS RESERVED

SWAN HARBOR FARM PARK
PIER IMPROVEMENTS
DEPARTMENT OF PARKS AND RECREATION
HARFORD COUNTY, MARYLAND

seal:

STATE OF MARYLAND
MICHAEL A. STOCKS
No. 16222
REGISTERED
PROFESSIONAL ENGINEER
07/07/2016

PROFESSIONAL CERTIFICATION. I HEREBY CERTIFY THAT THESE DOCUMENTS WERE PREPARED OR APPROVED BY ME, AND THAT I AM A DULY LICENSED PROFESSIONAL ENGINEER UNDER THE LAWS OF THE STATE OF MARYLAND.

LICENSE NO. 13254, EXPIRATION DATE: 12/18/16

job number	13-1335-002
scale	AS NOTED
drawn by	MAI
designed by	MAI
checked by	MS
no. date	07/07/2016
01	ISSUED FOR CONSTRUCTION

sheet title:

FISHING STATION
ENCLOSURE DETAILS

sheet number:

M-03

Q:\SMD\00-StructuresFacilities\13-1335-002 Swan Harbor\CADD\Mechanical\M-03.dwg

STRUCTURAL NOTES/SPECIFICATIONS:

1. ALL TIMBER SIZES ARE NOMINAL AND SHALL BE PRESSURE TREATED WITH WATER BORNE PRESERVATIVE IN ACCORDANCE WITH THE AMERICAN WOOD PROTECTION ASSOCIATION (AWPA) USE CATEGORY UC3B.

2. STRUCTURAL FASTENERS SHALL BE SDS SCREWS, TYPE–316 STAINLESS STEEL 2 1/2" LONG, BUGLE HEAD SCREWS, 10 GAUGE. LAG SCREWS SHALL BE HOT DIPPED GALVANIZED CONFORM TO ASTM A123. MINIMUM NAILING SHALL CONFORM TO TABLE 2304.9.1 OF THE INTERNATIONAL BUILDING CODE.

3. COMPOSITE DECKING SHALL BE CONSTRUCTED OF IPE AMERELO (TABEBUIA SERRAIFOLIA) AND BE OBTAINED FROM A SUPPLIER THAT CAN CERTIFY THAT THE LUMBER HAS COME FROM WELL MANAGED FORESTS ADHERING TO STRICT ENVIRONMENTAL AND SOCIOECONOMIC STANDARDS IN ADHERING TO STRICT PRINCIPLES AND CRITERIA OF THE FOREST STEWARDSHIP COUNCIL (FSC). FOR IPE DECKING, PRE DRILL PILOT HOLE AND COUNTER–BORE PER VENDERS RECOMMENDATIONS. INSTALL IN ACCORDANCE TO MANUFACTURER'S RECOMMENDATIONS.

4. ALL METAL ATTACHMENTS SHALL BE HOT DIPPED GALVANIZED, LIGHT–GAUGE 10 GAUGE METAL. ATTACHMENTS SHALL BE BY SIMPSON STRONG–TIE OR EQUAL AND SHALL BE INSTALLED IN ACCORDANCE WITH THE MANUFACTURER'S RECOMMENDATIONS.

5. DECK FASTENERS SHALL BE SDS SCREWS TYPE–316 STAINLESS STEEL 10D X 1 1/2" LONG SIMPSON STRONG–TIE OR EQUAL. COUNTERSINK TWO SCREWS PER CONNECTION.

6. STRUCTURAL A21 ANGLES SHALL BE SIMPSON STRONG–TIE OR EQUAL, 18 GA. HOT DIPPED GALVANIZED AND INSTALLED IN ACCORDANCE WITH THE MANUFACTURER'S RECOMMENDATIONS.

7. FOR X–BRACING ON PIER USE 1" DIAMETER GALVANIZED CARRIAGE BOLT WITH NUT AND DOCK WASHERS.

CODES, SPECIFICATIONS, AND STANDARDS:

1. INTERNATIONAL BUILDING CODE (IBC 2015).

2. NATIONAL DESIGN SPECIFICATIONS FOR WOOD CONSTRUCTION (NDS 2012), AND SUPPLEMENTS.

3. AMERICAN IRON AND STEEL INSTITUTE (AISI).

4. AMERICAN WOOD PROTECTION ASSOCIATION (AWPA).

5. HARFORD COUNTY CODE (CURRENT EDITION).

GENERAL REPAIR NOTES:

1. TIGHTEN ALL EXISTING BOLTS AND SCREWS.

2. REPLACE ANY MISSING WASHERS AND NUTS OR BOLTS THAT ARE BROKEN.

3. REPLACE RUSTED SCREWS, IN–KIND.

4. ALL SYP TIMBER SHALL BE PRESSURE TREATED WITH WATER–BORNE PRESERVATIVES IN ACCORDANCE WITH THE AMERICAN WOOD PRESERVERS' INSTITUTE STANDARD (AWPA), EXCEPT COMPOSITE DECKING AND NEW TREX HANDRAIL ON EAST FISHING PIER. SEAL ALL CUT SURFACES OF TREATED LUMBER WITH AN APPROVED PRESERVATIVE.

5. SELECTIVELY REPLACE 10% WORST 2X4 HORIZONTAL SLATS WITH NEW PRESSURE TREATED WOOD.

6. SELECTIVELY REPLACE 10% WORST 4X4 TOE–KICK BOARDS AT BASE OF DECK. SECURE 60% OF THOSE WHICH ARE IN PLACE WITH SDS S.S. SCREWS.

7. DOLPHIN PILES ARE LOOSE AND VISUALLY APPEAR DAMAGED. REMOVE BOTH DOLPHIN PILES. DO NOT DISTURB PIER OR CROSS BRACES. REFERENCE SHEET S–2 FOR LOCATION.

8. REPLACE SLOPING TOP RAIL WITH TREX OR EQUAL.

9. GENERAL CLEANING BY PRESSURE WASHING WITH STEAM ALL PRESSURE TREATED WOOD INCLUDING DECKING. SEAL ALL PRESSURE TREATED WOOD WITH PRODUCTS BY NEW IMAGE COATINGS LLC OR APPROVED EQUAL IF ENVIRONMENTALLY SAFE. REFERENCE WWW.SEAL–ONCE.COM.

10. REPAIR UPRIGHTS AS INDICATED ON SHEET S–2 AT DECK LIGHT LOCATIONS.

11. ADDITION OF TWO UPRIGHT 2X4 POSTS AT EQUAL SPACING IN RAIL SYSTEM. ATTACH EXISTING HORIZONTAL 2X4'S TO NEW UPRIGHT 2X4 POSTS. SEE DETAIL 1 ON SHEET S–3. ADDITION OF ANGLE ON EACH UPRIGHT 2X4 POST ATTACHING TO EXISTING 4X4 TOE–KICKS. SEE DETAIL 9 ON S–4.

12. INSTALL LAG SCREWS ON ALL TOE–KICK. 4 SCREWS IN EACH 4X4 WITH THE TWO CLOSEST TO THE POSTS ON A 45° ANGLE. SEE DETAIL 6 ON SHEET S–3.

13. ABANDON EXISTING CONDUIT UNDERNEATH THE PIER AND INSTALL NEW CONDUITS AT LOCATIONS SHOWN. REFERENCE ELECTRICAL DRAWINGS E–01, AND E–02.

14. ADDITION OF TIMER TO TURN PIER LIGHTS ON AND OFF AUTOMATICALLY. REFERENCE ELECTRICAL DRAWINGS AND E–01, E–02.

DEMOLITION:

1. PROTECT EXISTING CONSTRUCTION TO REMAIN DURING REMOVAL TO PREVENT DAMAGE.

2. CUT EXISTING CONSTRUCTION USING METHODS LEAST LIKELY TO DAMAGE ELEMENTS TO BE RETAINED OR ADJOINING CONSTRUCTION. IN GENERAL, WHERE CUTTING IS REQUIRED, USE HAND OR SMALL POWER TOOLS DESIGNED FOR SAWING OR GRINDING, NOT HAMMERING AND CHOPPING. CUT HOLES AND SLOTS NEATLY TO SIZE REQUIRED WITH MINIMUM DISTURBANCE OF ADJACENT SURFACES. TEMPORARILY COVER OPENINGS WHEN NOT IN USE.

3. PROMPTLY REPAIR DAMAGES TO EXISTING CONSTRUCTION BY DEMOLITION WORK AT NO COST TO THE OWNER.

4. REMOVE DEBRIS, RUBBISH AND OTHER MATERIALS RESULTING FROM DEMOLITION OPERATIONS FROM THE BUILDING SITE. TRANSPORT AND LEGALLY DISPOSE OF MATERIALS OFF SITE WITHIN 72 HOURS OF DEMOLITION. ALL DEBRIS IS TO BE PREVENTED FROM ENTERING THE WATER.

OWNERSHIP OF DOCUMENTS:

THE CONTRACTOR ACKNOWLEDGES THESE PLANS PREPARED BY JMT AS INSTRUMENTS OF PROFESSIONAL SERVICE. NEVERTHELESS, THE PLANS PREPARED UNDER THIS AGREEMENT SHALL REMAIN THE PROPERTY OF JMT. THE CONTRACTOR AGREES TO HOLD HARMLESS AND INDEMNIFY AGAINST ALL DAMAGES, CLAIMS, AND LOSSES, INCLUDING DEFENSE COSTS, ARISING OUT OF ANY REUSE TO THE PLANS WITHOUT THE WRITTEN AUTHORIZATION OF JMT.

CONTRACT UNIT PRICE:

1. DEMOLITION AS LUMP SUM

ABBREVIATIONS

ADJ.	= ADJUSTABLE	MLW	= MEAN LOW WATER
C TO C	= CENTER TO CENTER	MHW	= MEAN HIGH WATER
C.J.	= CONTROL JOINT	NO.	= NUMBER
℄	= CENTER LINE	N.T.S.	= NOT TO SCALE
CLR.	= CLEAR	O.C.	= ON CENTER
CONC.	= CONCRETE	PT.	= PRESSURE TREATED
CONT.	= CONTINUOUS	REINF.	= REINFORCEMENT
CMU	= CONCRETE MASONRY UNIT	SIM.	= SIMILAR
DIA.	= DIAMETER	S.S.	= STAINLESS STEEL
EL.	= ELEVATION	STD.	= STANDARD
EMB.	= EMBEDMENT	STGR.	= STRINGER
EX.	= EXISTING	SYP	= SOUTHERN YELLOW PINE
GA.	= GAUGE	T.O.	= TOP OF
GALV.	= GALVANIZED	TYP.	= TYPICAL
I.D.	= INSIDE DIAMETER	W/	= WITH
L	= ANGLE	U.N.O.	= UNLESS NOTED OTHERWISE
LLV	= LONG LEG VERTICAL	VERT.	= VERTICAL
MAX.	= MAXIMUM	V.I.F.	= VERIFY IN FIELD

LEGEND

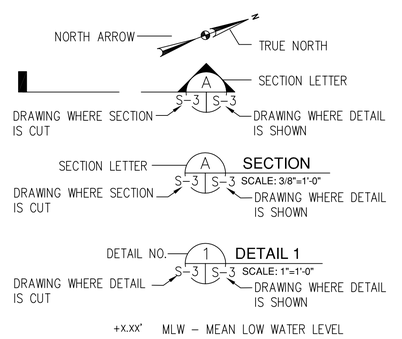

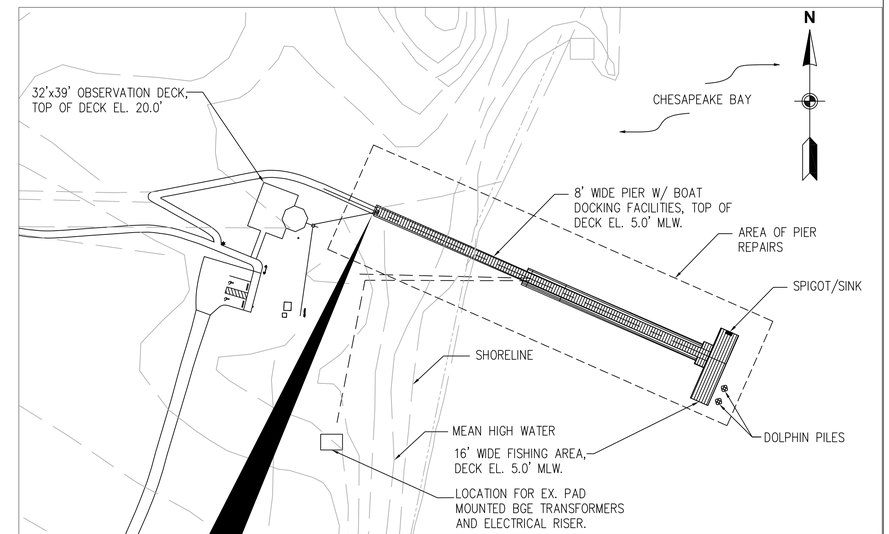

SITE PLAN

SCALE: 1"=60'–0"

SWAN HARBOR FARM PIER

1 S–1 | S–1 SCALE: N.T.S.

30' 0 30' 60'

SCALE: 1"= 60'-0"

JOHNSON, MIRMIRAN & THOMPSON

72 Loveton Circle
Sparks, Maryland
21152

phone / 410.329.3100
fax / 410.472.2200

www.jmt.com

ENGINEERING . PLANNING . ENVIRONMENTAL
CONSTRUCTION MANAGEMENT . WATER/WASTEWATER
SURVEYING . LANDSCAPE ARCHITECTURE
ARCHITECTURE . GEOTECHNICAL
FACILITIES ENGINEERING . INFORMATION TECHNOLOGY

©2010 ALL RIGHTS RESERVED

SWAN HARBOR FARM PARK
PIER IMPROVEMENTS
DEPARTMENT OF PARKS AND RECREATION
HARFORD COUNTY, MARYLAND

seal:

PROFESSIONAL CERTIFICATION. I HEREBY CERTIFY THAT THESE DOCUMENTS WERE PREPARED OR APPROVED BY ME, AND THAT I AM A DULY LICENSED PROFESSIONAL ENGINEER UNDER THE LAWS OF THE STATE OF MARYLAND.

LICENSE NO. 30892, EXPIRATION DATE: 11/29/16

job number	13–1335–002
scale	AS NOTED
drawn by	LW
designed by	DL
checked by	JC
no. date	07/07/2016
01	ISSUED FOR CONSTRUCTION

sheet title:
STRUCTURAL GENERAL NOTES AND SITE PLAN

sheet number:
S-1

Q:\SMD\00–StructuresFacilities\13–1335–002 Swan Harbor\CADD\Structural\S–1.dwg

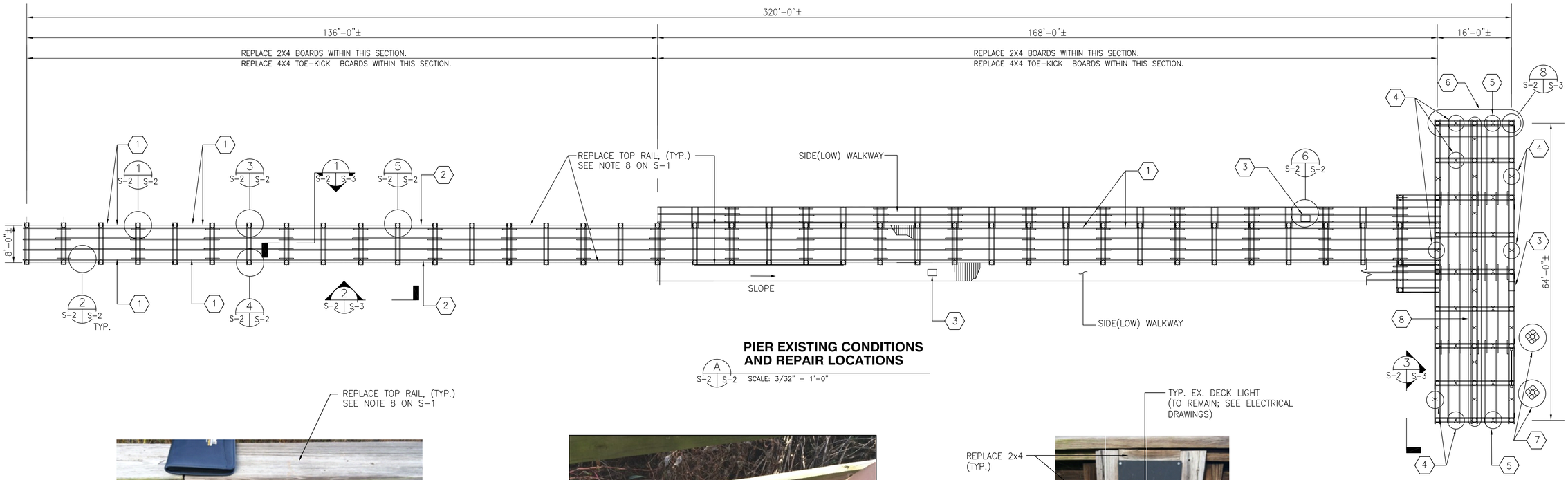

PIER EXISTING CONDITIONS AND REPAIR LOCATIONS

A S-2 | S-2 SCALE: 3/32" = 1'-0"

1 S-2 | S-2 **REPLACE 2X4 RAILING SLATS.** SCALE: N.T.S.

• SEE NOTE 6 ON S-1 UNDER REPAIR NOTES.

2 S-2 | S-2 **REPLACE 4X4 TOE-KICK AT BASE.** SCALE: N.T.S.

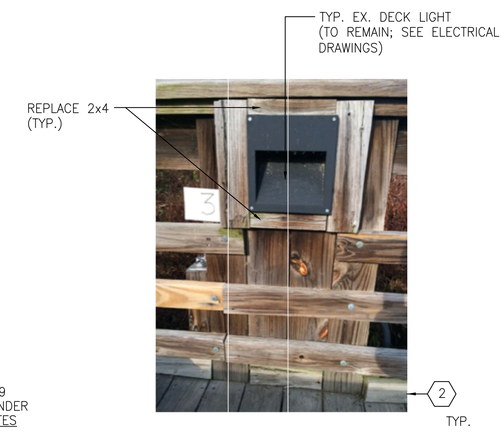

3 S-2 | S-2 **REPLACE 2X4 AROUND LIGHT AND BOTTOM 4X4 FRAMED AROUND CONDUIT.** SCALE: N.T.S.

NOTES:

1. REPLACE 2X4 HORIZONTAL RAILING SLATS.
2. REPLACE BOTTOM 4X4 TOE-KICK BOARD.
3. REPLACE ATON LIGHT.
4. REPAIR SINGLE DAMAGED CROSS BRACE. 'X' DENOTES CROSS BRACING, (BELOW WATERLINE.)
5. REPAIR BOTH CROSS BRACES, (BELOW WATERLINE)
6. NEW WATER PUMP FOR FISHING STATION. REFERENCE MECHANICAL DRAWINGS.
7. REMOVE EX. DOLPHIN PILES. (2 GROUPS OF 5)
8. ADD NEW CROSS BRACES. SEE 3 S-2 | S-3 SIM. (BELOW WATERLINE)

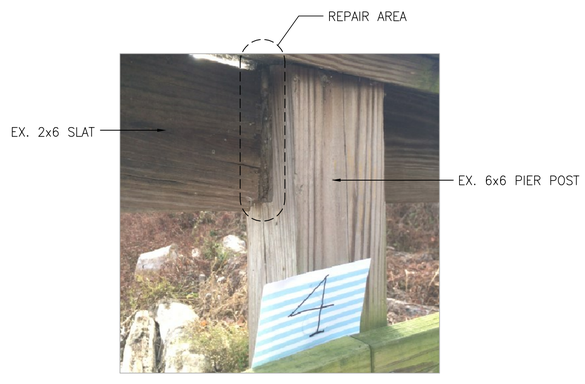

4 S-2 | S-2 **REPLACE UPPER 2X6 SLAT THAT IS NOTCHED INTO 6X6 POST.** SCALE: N.T.S.

5 S-2 | S-2 **REPLACE 2X6 AND SECURELY BOLT. REPLACE 4X4 TOE-KICK AT BOTTOM RIGHT SIDE AND ATTACH TO DECK.** SCALE: N.T.S.

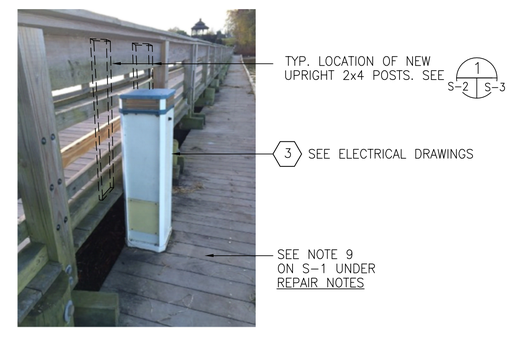

6 S-2 | S-2 **REPLACE UPRIGHT ATON LIGHT PEDESTALS. WIRING UNDERNEATH IS DAMAGED AND DISLODGED.** SCALE: N.T.S.

4' 0 4' 8' 12'
SCALE: 3/32"= 1'-0"

JOHNSON, MIRMIRAN & THOMPSON
72 Loveton Circle
Sparks, Maryland
21152
phone / 410.329.3100
fax / 410.472.2200
www.jmt.com
ENGINEERING . PLANNING . ENVIRONMENTAL
CONSTRUCTION MANAGEMENT . WATER/WASTEWATER
SURVEYING . LANDSCAPE ARCHITECTURE
ARCHITECTURE . GEOTECHNICAL
FACILITIES ENGINEERING . INFORMATION TECHNOLOGY
©2010 ALL RIGHTS RESERVED

SWAN HARBOR FARM PARK
PIER IMPROVEMENTS
DEPARTMENT OF PARKS AND RECREATION
HARFORD COUNTY, MARYLAND

seal:

STATE OF MARYLAND
JEFFREY CERBUTT
No. 30892
PROFESSIONAL ENGINEER
7/12/16

PROFESSIONAL CERTIFICATION. I HEREBY CERTIFY THAT THESE DOCUMENTS WERE PREPARED OR APPROVED BY ME, AND THAT I AM A DULY LICENSED PROFESSIONAL ENGINEER UNDER THE LAWS OF THE STATE OF MARYLAND.
LICENSE NO. 30892, EXPIRATION DATE: 11/29/16

job number	13-1335-002
scale	AS NOTED
drawn by	LW
designed by	DL
checked by	JC
no. date	07/07/2016
01	ISSUED FOR CONSTRUCTION

sheet title:
PIER REPAIR LOCATIONS AND CALL – OUTS

sheet number:
S-2

Q:\SMD\00-StructuresFacilities\13-1335-002 Swan Harbor\CADD\Structural\S-2.dwg

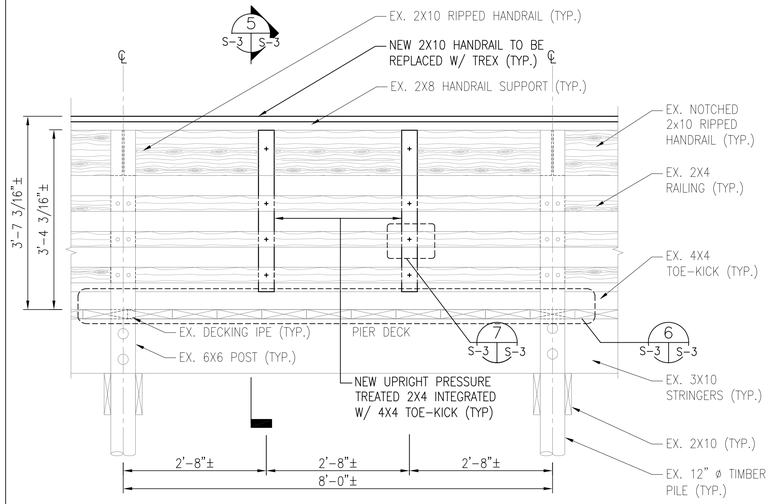

1 S-2 S-3 **TYP. UPRIGHT 2x4 POSTS**
SCALE: 3/4"=1'-0"

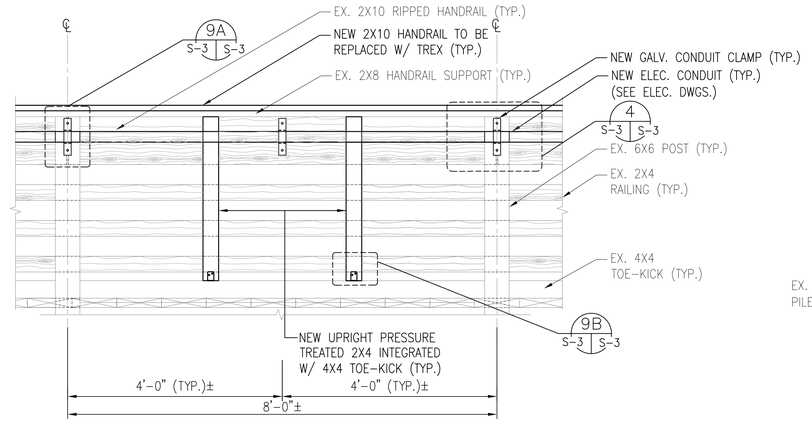

2 S-2 S-3 **TYP. CONDUIT AND 2x4 POSTS WITH ANGLE DETAIL**
SCALE: 3/4"=1'-0"

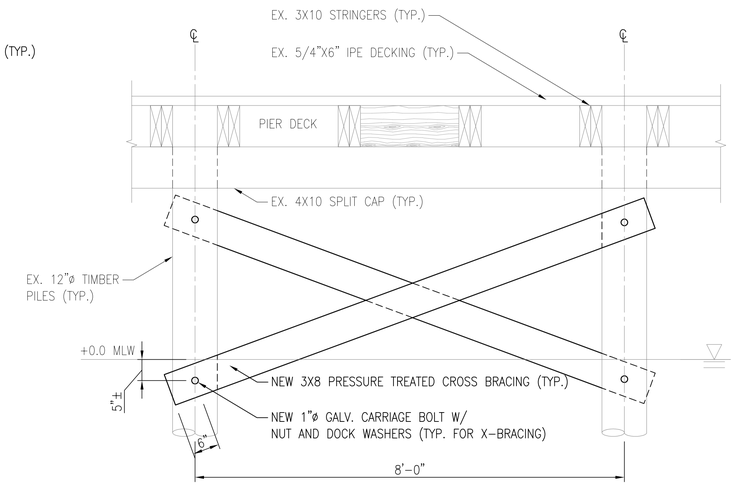

3 S-2 S-3 **TYP. CROSS BRACING REPAIR**
SCALE: 3/4"=1'-0"

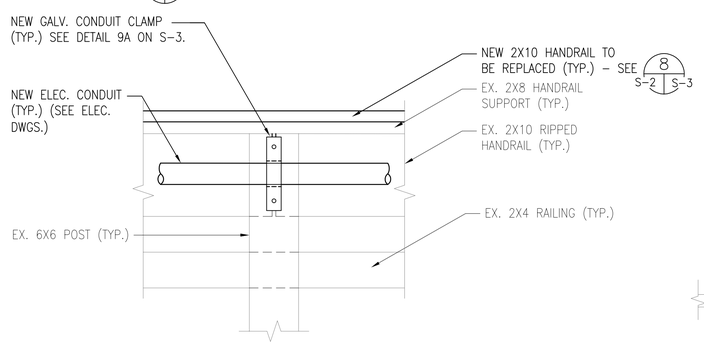

4 S-3 S-3 **TYP. CONDUIT DETAIL SIDE VIEW**
SCALE: 1 1/2"=1'-0"

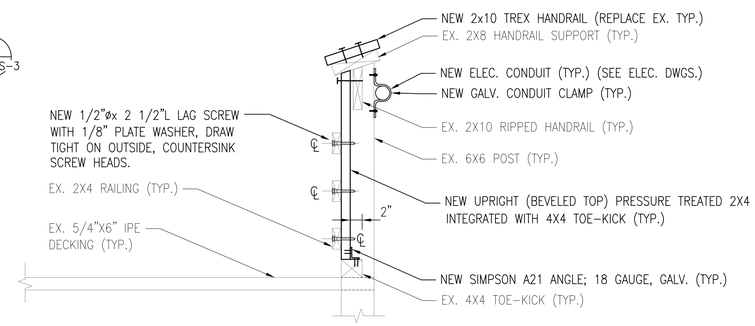

5 S-3 S-3 **TYP. UPRIGHT POST REPAIR DETAIL**
SCALE: 1"=1'-0"

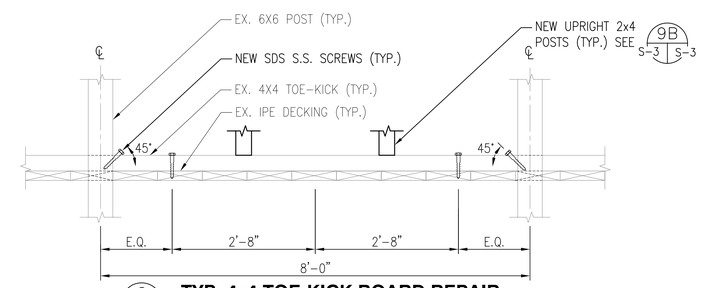

6 S-3 S-3 **TYP. 4x4 TOE-KICK BOARD REPAIR**
SCALE: 3/4"=1'-0"

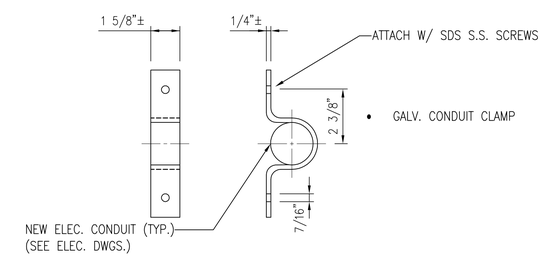

9A S-3 S-3 **TYP. CONDUIT ATTACHMENT CLAMP**
SCALE: 3" = 1'-0"

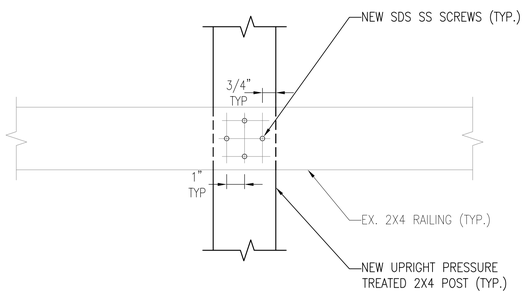

7 S-3 S-3 **TYP. UPRIGHT 2x4 POST NAILING DETAIL**
SCALE: 3"=1'-0"

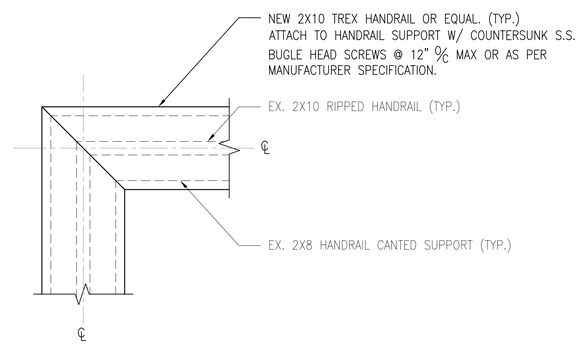

8 S-2 S-3 **TYP. HANDRAIL CORNER REPAIR PLAN DETAIL**
SCALE: 1 1/2"=1'-0"

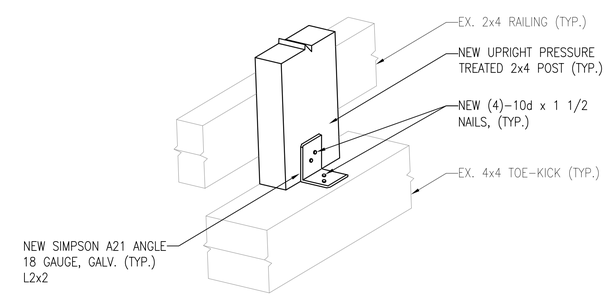

9B S-3 S-3 **TYP. UPRIGHT 2x4 POST / CONNECTOR**
SCALE: 3"=1'-0"

6" 0 6" 12" 18"
SCALE: ¾"= 1'-0"

4" 0 4" 8"
SCALE: 1½"= 1'-0"

2" 0 2" 4"
SCALE: 3" = 1'-0"

JOHNSON, MIRMIRAN & THOMPSON
72 Loveton Circle
Sparks, Maryland
21152
phone / 410.329.3100
fax / 410.472.2200
www.jmt.com
ENGINEERING . PLANNING . ENVIRONMENTAL
CONSTRUCTION MANAGEMENT . WATER/WASTEWATER
SURVEYING . LANDSCAPE ARCHITECTURE
ARCHITECTURE . GEOTECHNICAL
FACILITIES ENGINEERING . INFORMATION TECHNOLOGY

©2010 ALL RIGHTS RESERVED

SWAN HARBOR FARM PARK
PIER IMPROVEMENTS
DEPARTMENT OF PARKS AND RECREATION
HARFORD COUNTY, MARYLAND

seal:

PROFESSIONAL CERTIFICATION. I HEREBY CERTIFY THAT THESE DOCUMENTS WERE PREPARED OR APPROVED BY ME, AND I AM A DULY LICENSED PROFESSIONAL ENGINEER UNDER THE LAWS OF THE STATE OF MARYLAND.
LICENSE NO. 30892, EXPIRATION DATE: 11/29/16

job number	13-1335-002
scale	AS NOTED
drawn by	LW
designed by	DL
checked by	JC
no. date	07/07/2016
01	ISSUED FOR CONSTRUCTION

sheet title:
PIER REPAIR DETAILS

sheet number:
S-3